pewag

WORLD'S STRONGEST CHAIN

www.pewag.com

Bucket Elevator Chains and Components

Conveying – Moving

Content

Bucket Elevator Chains and Components

Customer satisfaction is our primary operating principle. Our customers benefit from our metallurgical expertise, our many years of experience in a wide variety of industries, and our unfailing commitment to the highest quality standards.

Technical changes and misprints are subject to alteration.

Welcome to the pewag group

We are an internationally operating group of companies. Our track record goes back to the year 1479.

Determination to innovate

pewag group's Mission Statement expresses the goals of our actions:

Driven by our determination to innovate, we at pewag manufacture the world's best chains today and in the future. The high quality of our products and services as well as the passionate commitment of our employees guarantee safety for moving people and goods. Our customers set the benchmark for our achievements.

Principles of pewag group

Brands
The values of our premium brands are demonstrated by our first class quality and innovations and are communicated consistently and coherently. We anticipate market demands and changes in the environment and adapt our strategies, organization and actions accordingly.

Due diligence
In all our processes we use due diligent business practices and efficiency and strive to improve these continuously. In the long run, high profits secure the future of the organization and the growth of the corporate group.

Technological leadership
We secure our technological leadership through highest product quality, constant improvements and innovations of products, as well as manufacturing processes. We commit ourselves to careful treatment of the environment by reducing the use of energy and raw materials, ensuring the longevity of our products and making them recyclable.

People within our group
We value open, honest and team-oriented work-style, which is based on transparent communication. The ideas, opinions and experience of our employees are valuable inputs for our decision making process. We strive for stable and fair partnerships with our customers, suppliers and other business partners. Social aspects are considered when making business decisions.

We are a modern group of companies which looks back to a tradition and experience of more than 500 years. Since our founding years, a lot has changed, but the values that made our success possible from the beginning remain.

pewag group – Innovation. Quality. Partnership.

History of the pewag group

Advantage through tradition

The history of pewag group goes back to the 15th century and therefore makes us the oldest chain manufacturer worldwide. With our experience we are ready for the future.

Timetable of important events

1479 First documented references of a forging plant in Brückl
1787 Foundation of a chain forgery in Kapfenberg
1803 Foundation of a chain forgery in Graz
1836 Establishment of an iron casting plant in Brückl
1912 Production of the First Snow Chain worldwide
1923 Merger of plants in Graz and Kapfenberg – Creation of the name "pewag"
1972 Foundation of a sales company in Germany
1975 Foundation of a sales company in the USA
1993 Foundation of pewag austria GmbH
1994 Foundation of the first subsidiary in Czech Repbulic
1999 Acquisition of the Weissenfels Group
2003 Separation from the Weissenfels Group
2005 Reorganization into 2 groups:
Schneeketten Beteiligungs AG Group – Snow Chains
pewag austria GmbH Group – Technical Chains
2009 Acquisition of Chaineries Limousines S.A.S.

Lithography forging plant Brückl 1855

Anchor chain forgery 1878

Chain forgers 1956

Quality management

Our ultimate goal is to achieve customer satisfaction

To reach this goal, the quality management of the pewag group is determined by the principle: "We supply our customers with high-quality products which fully meet technological standards and its usage requirements," this is summarized in the four following mandatory principles:

Market oriented quality
To maintain and improve its competitive position, the quality of products and services of the pewag group must meet both the specifications of our customers and the standards one can expect from the technological leader in the industry.

Economic quality
As a profit-oriented company the quality is also determined by the material used, labor costs and financial possibilities, i.e. also within the framework awarded by the customer.

Responsibility for Quality
Quality management is the task and obligation of executives at all levels. Every employee of the pewag group has to be integrated by management in the preparations, execution and evaluation of the quality management measures.

Every employee takes the responsibility for the quality of his work.

Process oriented quality assurance
The close interaction between sales, product development, production and customer service is regulated within the individual companies by fixed processes and activities, as well as responsibilities with the aim to reach and maintain the defined quality standards.

Business areas

Working with pewag products

The pewag group has a substantial and diverse spectrum of products and services.

Our range of products varies from traction chains for tires (snow chains for passenger cars, trucks and special-purpose vehicles, tire protection chains for mining vehicles) over different industrial chains to products for the do-it-yourself sector (light chains, belts, etc.)

Segment A
Snow and forestry chains

Segment B
Hoist and conveyor chains

Segment C
Do-it-yourself

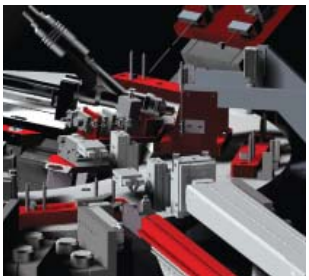

Segment D
Engineering

Segment F
Lifting accessories and lashing chains

Segment G
Tire protection chains

Environment – we take responsibility

Ecological awareness in all areas

We continuously strive to keep the influence of our business on the environment as low as possible. Our production and warehousing is organized so that all legal requirements on environmental protection are fulfilled. Furthermore, we consider ecological aspects for our product development, processes and distribution channels and include these in our business planning.

Consequently, we are permanently striving for a continuous improvement and development of our established products to reach higher load capacities and safety for our customers with lighter weights and longer life spans.

Wherever we cannot avoid an environmental impact, we strive to reduce the use of energy, environmentally harmful emissions and keep the production of waste to a minimum. When investing in new machines we consider the technically most adequate and economically feasible state-of-the-art designs for their designated area of use.

Our environmental management is certified according to ISO 14001:2004. Regular internal audits assist to supervise compliance, test the effectiveness of our set standards and serve as a basis to determine improvement potentials.

Out of this long-lasting tradition we take responsibility for our products, employees, our sites and the environment very seriously.

We commit to comply with all environment-related regulations and continually improve our performance for the environment by defined goals. For that purpose we use modern production technologies. We enhance the ecological awareness of our employees by regular trainings.

We engage with our customers, neighbors and government agencies in an open communication and inform them about our environmental management wherever appropriate.

By providing advice, we want to inform our customers about the environmental aspects related to the use of our products – especially their long life spans. We are striving to motivate our customers and suppliers to consider environmental protection in their sphere of influence and use the same environmental standards as we do.

Customer proximity

International presence

After a changing history pewag has established itself today as one of the world's leading chain manufacturers with 22 sales locations and 6 production sites on two continents - Europe and North America.

pewag as an international corporate group is supported by a strong and professional partner network. This cooperation allows for optimized customer service and support.

Production and sales locations

Europe	
Austria	pewag austria GmbH, Graz pewag austria GmbH, Kapfenberg pewag Schneeketten GmbH & Co KG, Graz pewag Schneeketten GmbH & Co KG, Brückl pewag engineering, Kapfenberg AMW Grünberger Handelsgesellschaft mbH, Wien
Germany	pewag Deutschland GmbH, Unna pewag Schneeketten Deutschland GmbH, Unna
France	J3C S.A.S. pewag France, Seyssins Chaineries Limousines S.A.S., Bellac
Italy	pewag italia s.r.l., Andrian
Netherlands	pewag nederland B.V., Hillegom APEX International BV, Hillegom

Europe	
Poland	pewag polska Sp. z o.o., Buczkowice
Russia	OOO „pewag", Moscow
Sweden	pewag sweden AB, Emmaboda
Slovakia	pewag slovakia s.r.o., Krškany
Czech Republic	Řetězárna Česká Třebová s.r.o., Česká Třebová pewag s.r.o, Vamberk
Ukraine	TOV „pewag Ukraine", Lviv

North America	
USA	pewag Inc., Bolingbrook, Illinois pewag Inc., Rocklin, California

pewag group presents
itself on the internet.
More ...

Bucket Elevator Chain Systems

Bucket Elevator Chain Systems

Overview

pewag
Bucket Elevator Chains

pewag – high quality
Bucket Elevator Chains

pewag conveyor chains are made from fine – grained, non – ageing special CrNi-, CrNiMo-, MnCr - alloyed steel.
By ensuring optimum heat treatment pewag maintain high quality standards.

pewag conveyor chains have consistently high core quality which gives resistance to shock loadings and ensures maximum breaking loads and excellent fatigue strength can be achieved.

Case hardened conveyor chains can be used for operating temperatures of up to 200 °C (392°F) without loss of surface hardness.

The chains are manufactured with very close production tolerances to ensure a smooth, parallel run over the sprockets.
All round steel chains and components are matched regarding to strength and uniform hardness, to minimize the wear and provide the greatest possible wear life and maximum chain life, to guarantee a long lasting chain system.

Extensive range of pewag conveyor chains up to 38 mm, chain couplings, bucket attachments chain sprockets, chain wheels and buckets provide the optimum design for bucket elevators in the bulk industry.

Cross section at the interlink point of contact

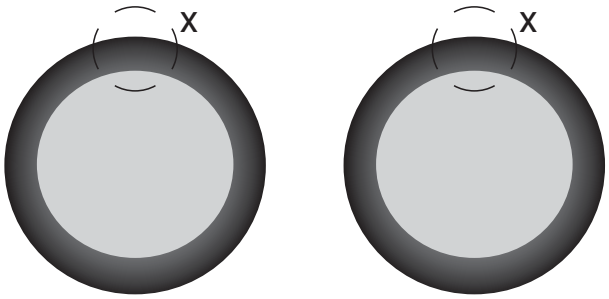

E 10
Quality grade G80E10
Carburizing depth E10
= 0,10 x chain dia.

E 14
Quality grade G80E14
Carburizing depth E14
= 0,14 x chain dia.

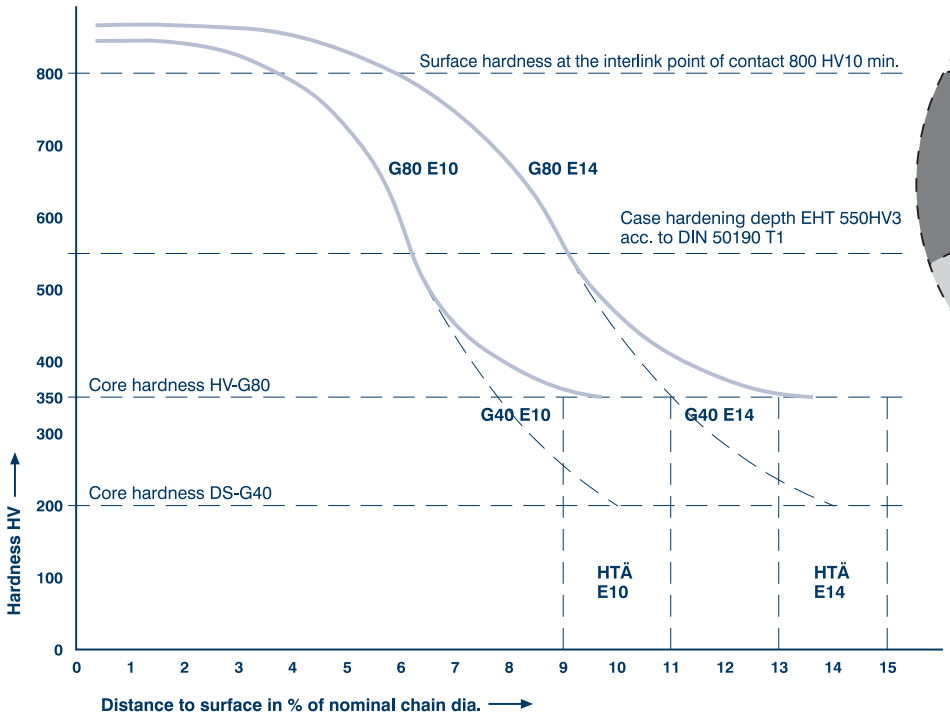

Detail X

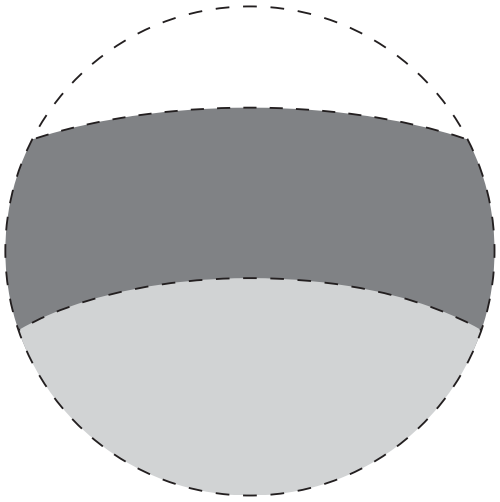

Bucket Elevators with BDD-S-system

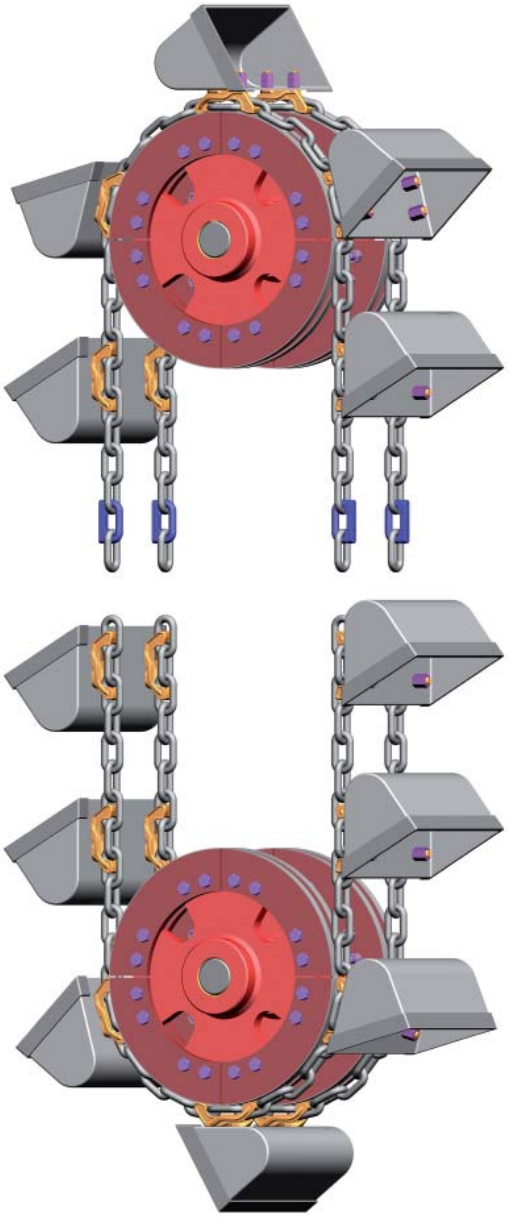

Conventional bucket elevator
Mixed discharge
Bucket back wall attachment

Centre discharge bucket elevator
Gravity discharge
Bucket side wall attachment

Chain system for heavy duty, high capacity- and gravity discharge with centre discharge bucket elevators to elevate a wide range of bulk materials, with highly wear resistant, long round steel chains, high chains speeds result in max. capacities with high capacity buckets, for chain sprockets with replaceable, adjustable individual teeth and plain segmented chain wheels, bucket attachment over 2-chain link pitches ensure optimised bucket support during filling and discharge, chains and buckets are assembled separately, bucket spacing can be changed, simple assembly and disassembly of the bucket attachment BDD-S.

Bucket Elevators with BHV-system

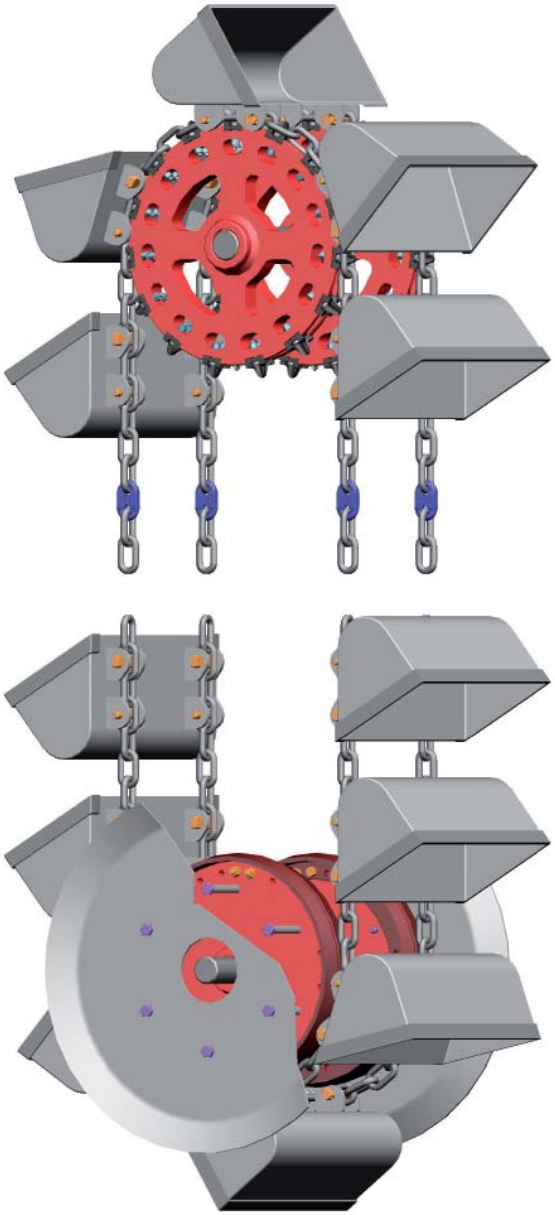

Conventional bucket elevator
Mixed discharge
Bucket back wall attachment

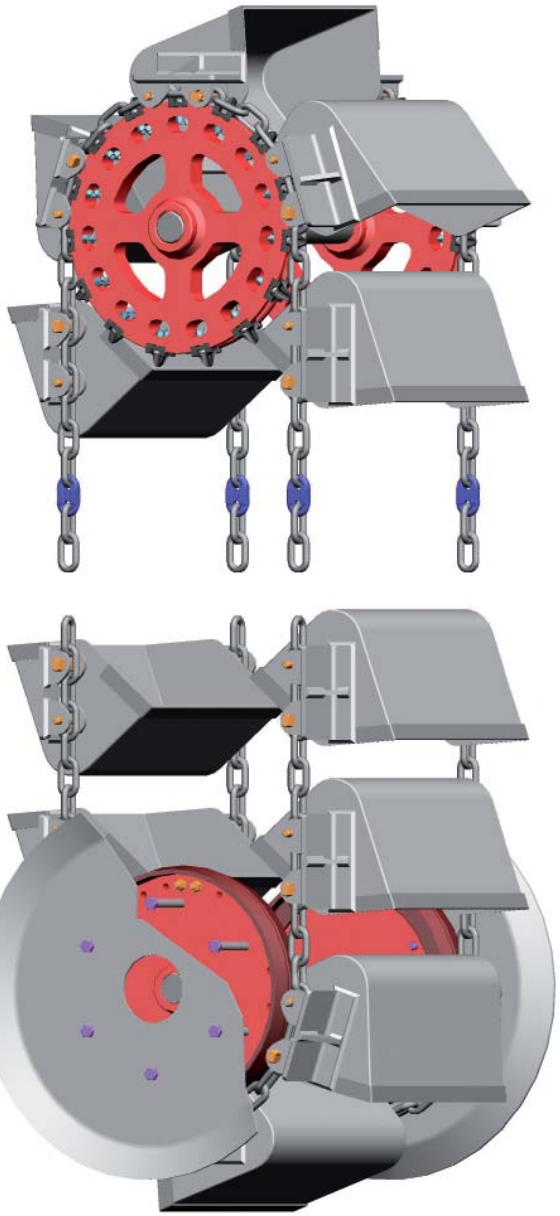

Centre discharge bucket elevator
Gravity discharge
Bucket side wall attachment

Chain system for heavy duty, high capacity- and gravity discharge with centre discharge bucket elevators to elevate a wide range of bulk materials, with highly wear resistant, long round steel chains, high chains speeds result in max. capacities with high capacity buckets, for chain sprockets with replaceable, adjustable individual teeth and tension free tail section, bucket attachment over 2-chain link pitches ensure optimised bucket support during filling and discharge, chains and buckets are assembled separately, bucket spacing can be changed, simple assembly and disassembly of the bucket attachment BHV.

Bucket Elevators with BDS-S/BDS-system

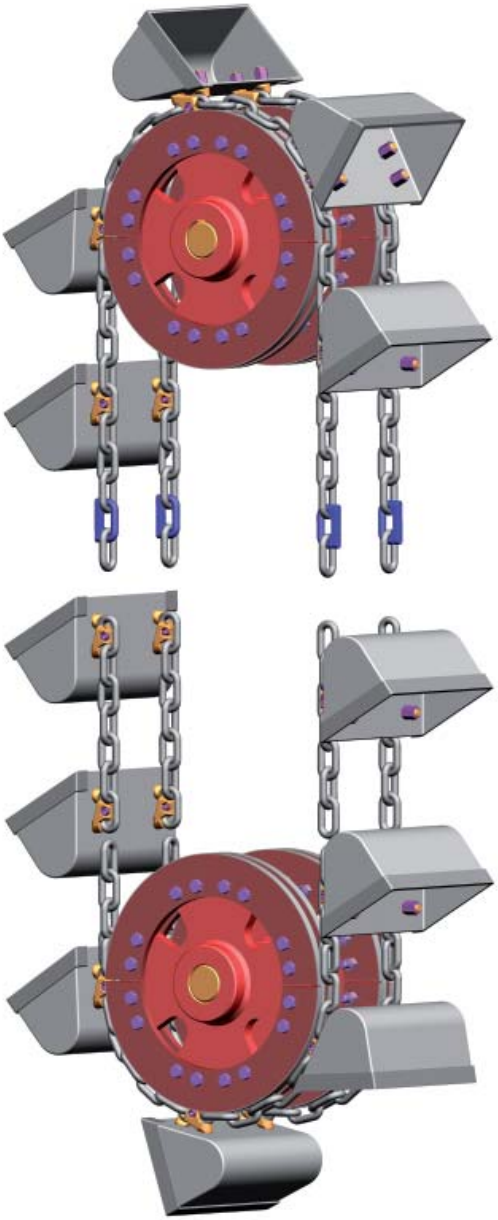

Conventional bucket elevator
Mixed discharge
Bucket back wall attachment

Centre discharge bucket elevator
Gravity discharge
Bucket side wall attachment

Chain system for heavy duty, high capacity- and gravity discharge with centre discharge bucket elevators to elevate a wide range of bulk materials, with highly wear resistant, long round steel chains, high chains speeds result in max. capacities with DIN – buckets, for chain sprockets with replaceable, adjustable individual teeth and plain segmented chain wheels, BDS stud dimensions are designed to match DIN standard shackles – existing chain end and shackle systems can be converted, chains and buckets are assembled separately, bucket spacing can be changed, simple assembly and disassembly of the bucket attachment BDS-S / BDS.

Bucket Elevators with SDS, SDD and DOB-system

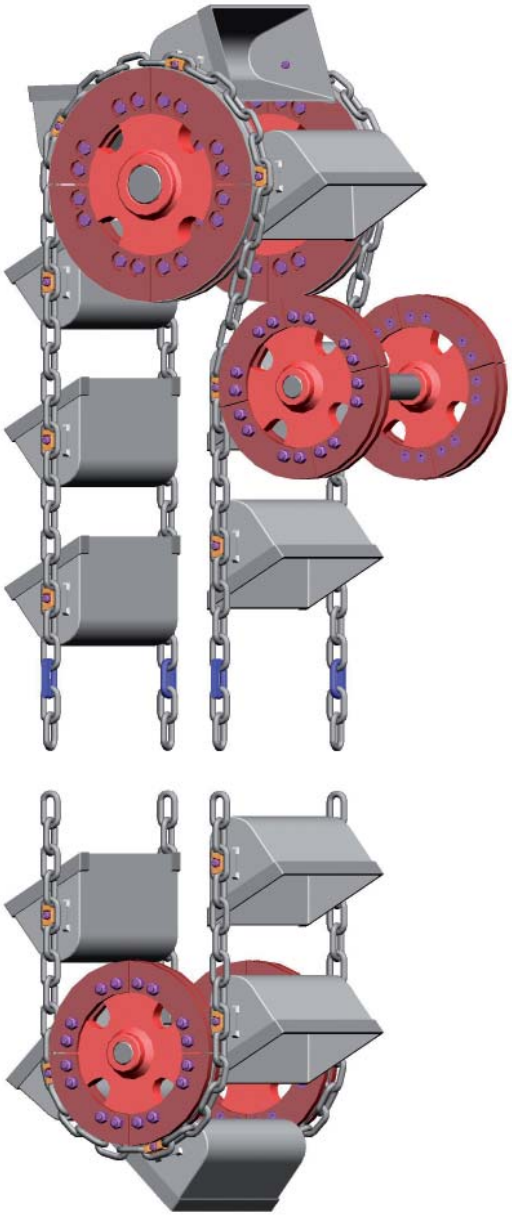

Positive discharge bucket elevator with snub wheels
Gravity discharge
Bucket side wall attachment

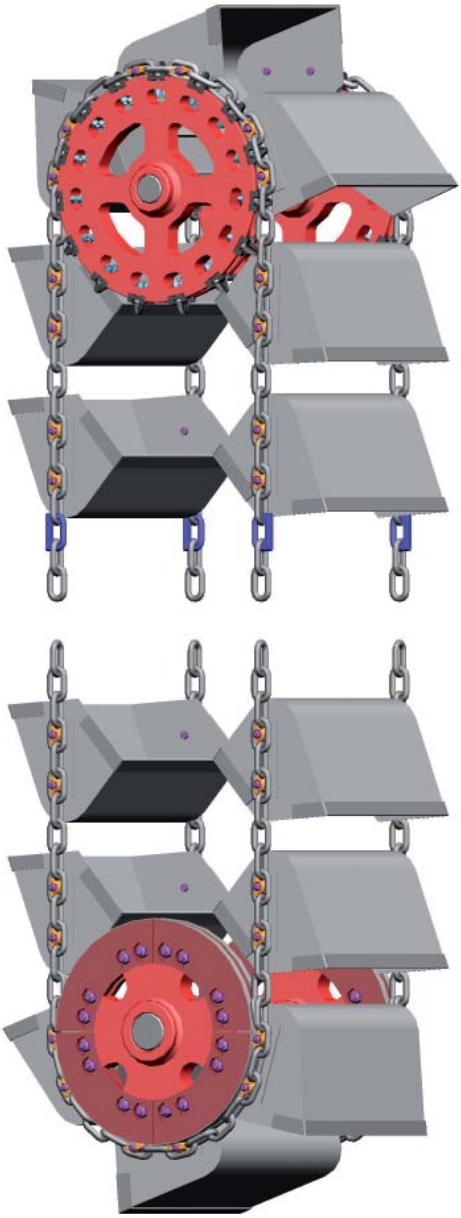

Centre discharge bucket elevator
Gravity discharge
Bucket side wall attachment

Chain systems for bucket elevators with gravity discharge, to elevate a wide range of bulk materials, which are difficult to discharge, with highly wear resistant, long round steel chains, for chain sprockets with replaceable, adjustable individual teeth and plain segmented chain wheels, existing chain end and shackle systems can be converted, chains and buckets are assembled separately, bucket spacing can be changed, depending on the bucket size the bucket attachment is selected by means of one-link attachments SDS, DOB-chain or two-link attachment SDD, simple assembly and disassembly of the bucket attachments.

Bucket Elevators with chain ends and chain shackles

Conventional bucket elevator
Mixed discharge
Bucket back wall attachment

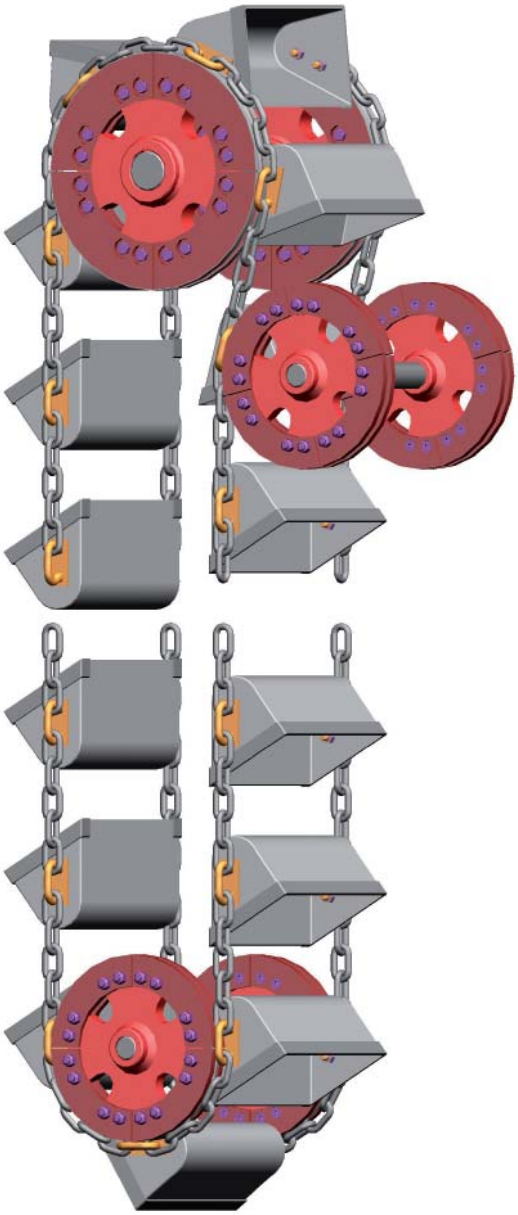

Positive discharge bucket elevator with snub wheels
Gravity discharge
Bucket side wall attachment

Traditional design for bucket elevators acc. to DIN – Standard 15251, chain ends and chain shackles are connected to form an endless chain loop, DIN recommends to use the next size up pitch chain shackle in comparison with the chain pitch, for drive and tail sections are used plain segmented chain wheels.

Chains and Components

Content Chains and Components

Overview

HV Round steel chains

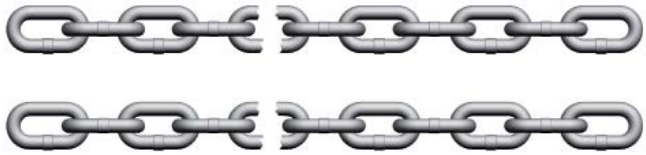

HV-chains made from CrNi- or CrNiMo-special alloyed steel are suitable for high capacity bucket elevators with high dynamic and static loads. Supplied as matched pairs – for an exact parallel run of the chain links.

Surface finish: polished and waxed

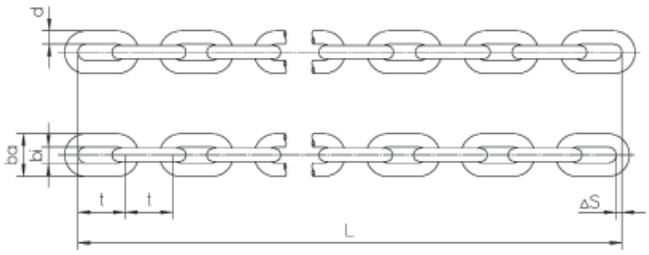

Chain d x t [mm]	Chain with bi min. [mm]	Chain with ba max. [mm]	Weight [kg/m]	Standard length Links	Standard length L* [mm]	G80 E10 Proof load [kN]	G80 E10 Breaking-load [kN]	G80 E14 Proof load [kN]	G80 E14 Breaking-load [kN]
14 x 50	16,3	47	4,10	215	10.750	74	128	65	110
16 x 64	20	55	5,30	167	10.688	96	160	84	140
19 x 75	22	63	7,40	143	10.725	135	227	117	198
22 x 86	26	74	9,90	119	10.234	182	304	160	266
26 x 100	31	87	13,80	83	8.300	255	425	220	370
30 x 120	36	102	18,70	47	5.640	340	566	300	500
34 x 136	39	113	23,80	35	4.760	425	710	375	630
38 x 144	44	127	30,00	29	4.176	530	910	480	800

* Further dimensions and qualities on request.

Technical Datas
Chain length L production tolerance = +0,3 / -0,15% = 0,45% total; this means that the difference between chain lengths of 10 m is max. 45 mm.
Chain length production tolerance Δ S of matched chain lengths is 0,05% or max. 3 mm for two or multiple chain strand conveyors

Example of the order
16 pcs. HV-chains 22 x 86 G80E10 L = 119 links = 10.234 mm each, supplied as matched pairs

Quality grade	G80 E10	G80 E14
Breaking stress [N/mm²]	400	350
Proof stress [N/mm²]	240	210
Breaking elongation apprx. [%]	2	2
Surface hardness at interlink HV 10	800	800
Carburizing depth HTÄ ... d +/- 0,01d	0,10 [1)]	0,14 [2)]
Case hardening depth EHT 550 HV 3 ... d min.	0,06 [3)]	0,09 [4)]
Material incl. d = 22 mm: CrNi-alloyed Material from d=26 mm: CrNiMo-alloyed		

Proof/Breaking load tolerance -10% permissible depending on the batches.

Carburizing depth HTÄ after macroetching:
[1)] 30 Ø u. 34 Ø - 0,09 d; 38 Ø - 0,08 d
[2)] 30 Ø - 0,12 d; 34 Ø - 0,11 d; 38 Ø - 0,09 d

Case hardening depth EHT 550 HV 3:
[3)] 30 Ø u. 34 Ø - 0,05 d; 38 Ø - 0,04 d
[4)] 30 Ø - 0,08 d; 34 Ø - 0,07 d; 38 Ø - 0,05 d

DS Round steel chains

DS-chains made from MnCr-special alloyed steel for bucket elevators with medium dynamic and static loads. Supplied as matched pairs – for an exact parallel run of the chain links.

DSU-chains for plain chain wheels
DSZ-chains for toothed chain sprockets

Surface finish: polished and waxed

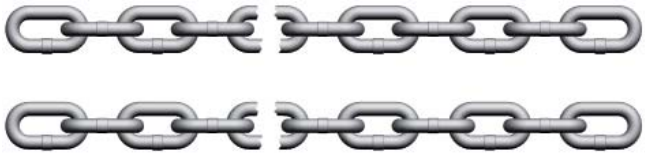

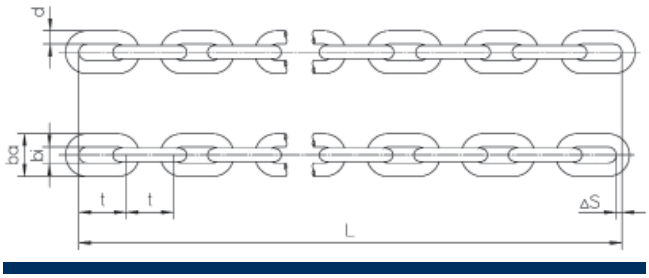

Chain d x t [mm]	Chain with bi min. [mm]	Chain with ba max. [mm]	Weight [kg/m]	Standard length Links	Standard length L* [mm]	G40 E10 Proof load [kN]	G40 E10 Breaking-load [kN]	G40 E14 Proof load [kN]	G40 E14 Breaking-load [kN]
14 x 50	16,3	47	4,10	215	10.750	39	78	32	64
16 x 64	20	55	5,30	167	10.688	50	100	42	84
19 x 75	22	63	7,40	143	10.725	71	142	60	120
22 x 86	26	74	9,90	119	10.234	95	190	80	160
26 x 100	31	87	13,80	83	8.300	128	255	110	220
30 x 120	36	102	18,70	47	5.640	171	342	148	296
34 x 136	39	113	23,80	35	4.760	250	500	190	380

* Further dimensions and qualities on request.

Technical Datas
Chain length L production tolerance = +0,3 / -0,15% = 0,45% total; this means that the difference between chain lengths of 10 m is max. 45 mm.
Chain length production tolerance △ S of matched chain lengths is 0,05% or max. 3 mm for two or multiple chain strand conveyors

Example of the order
16 pcs. DSU-chains 22 x 86 G40E10 L = 119 links = 10.234 mm each, supplied as matched pairs

Quality grade	G40 E10	G40 E14
Breaking stress [N/mm²]	250	210
Proof stress [N/mm²]	125	105
Breaking elongation apprx. [%]	2	2
Surface hardness at interlink HV 10	800	800
Carburizing depth HTÄ ... d +/- 0,01d	0,10 [1)]	0,14 [2)]
Case hardening depth EHT 550 HV 3 ... d min.	0,063 [3)]	0,09 [4)]
Material: MnCr-alloyed		

Proof/Breaking load tolerance -10% permissible depending on the batches.

Carburizing depth HTÄ after macroetching:
[1)] 30 ø u. 34 ø – 0,09 d
[2)] 30 ø – 0,12 d; 34 ø – 0,11 d

Case hardening depth EHT 550 HV 3
[3)] 30 ø u. 34 ø – 0,05 d
[4)] 30 ø – 0,08 d; 34 ø – 0,07 d

Chain ends
acc. to DIN 764 and DIN 766

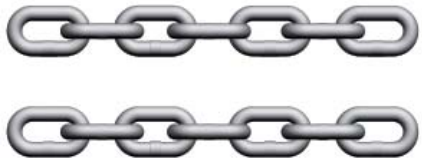

Chain ends made from Mn-, MnCr- or CrNi-alloyed steel for DIN-bucket elevators with chain shackles.
The chain ends are connected with the next size up pitch chain shackle for friction drive systems.

Surface finish: polished and waxed

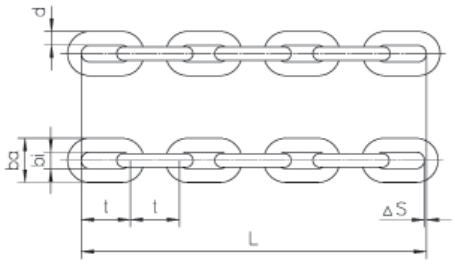

Dimensions acc. to DIN 764

Chain d x t [mm]	Chain width bi min. [mm]	Chain width ba max. [mm]	Weight [kg/m]	G40 E10 Proof load [kN]	G40 E10 Breaking-load [kN]	G80 E10 Proof load [kN]	G80 E10 Breaking-load [kN]	Chain shackle plain [1] [mm]	Chain shackle toothed [1] [mm]
10 x 35	14	36	2,00	20	40	33	55	45	35
13 x 45	18	47	3,50	31,5	63	55,8	93	56	45
16 x 56	22	58	5,20	50	100	84	140	63	56
18 x 63	24	65	6,50	63	125	107	178	70	63
20 x 70	27	72	8,20	80	160	132	220	80	70
23 x 80	31	83	11,00	100	200	174	290	91	80
26 x 91	35	94	14,00	125	250	223	371	105	91
30 x 105	39	108	19,00	170	340	296	494	126	105
33 x 115	43	119	22,50	200	400	359	599	126	-
36 x 126	47	130	26,50	250	500	427	712	147	126

Further qualities on request.
[1] Recommended chain shackle acc. to DIN for wheels.

Dimensions acc. to DIN 766

Chain d x t [mm]	Chain width bi min. [mm]	Chain width ba max. [mm]	Weight [kg/m]	G40 E10 Proof-load [kN]	G40 E10 Breaking-load [kN]	G80 E10 Proof-load [kN]	G80 E10 Breaking-load [kN]	Chain shackle plain [1] [mm]	Chain shackle toothed [1] [mm]
10 x 28	12,0	36	2,30	20	40	33	55	45	-
13 x 36	15,6	47	3,80	31,5	63	55,8	93	56	-
16 x 45	19,2	58	5,80	50	100	84	140	63	-
18 x 50	21,6	65	7,30	63	125	107	178	70	-
20 x 56	24,0	72	9,00	80	160	132	220	80	-
23 x 64	27,6	83	12,00	100	200	174	290	91	-
26 x 73	31,2	94	15,00	125	250	223	371	105	-
30 x 84	36,0	108	20,00	170	340	296	494	126	-
33 x 92	39,6	119	25,00	200	400	359	599	126	-
36 x 101	43,2	130	29,00	250	500	427	712	147	-

Further qualities on request
[1] Recommended chain shackle acc. to DIN for wheels

Technical Datas
Tolerance type A: calibrated, as matched chain ends, for chain sprockets
Tolerance type B: non-calibrated, as matched chain ends, for plain chain wheels
Chain length tolerance △ S of matched chain ends max. 0,5 mm

Example of the order
60 pcs. chain ends A 23 x 80 G40E10 L = 7 links each, supplied as matched pairs

Quality grade	G40 E10	G80 E10
Breaking stress [N/mm²]	250	350
Proof stress [N/mm²]	125	210
Breaking elongation apprx. [%]	2	2
Surface hardness at interlink HV 10	750	750
Carburizing depth HTÄ ... d +/- 0,01d	0,10 [1)]	0,10 [1)]
Case hardening depth EHT 550 HV 3 ... d min.	0,06 [2)]	0,06 [2)]
Material	MnCr	CrNi/ CrNiMo

Proof/Breaking load tolerance -10% permissible depending on the batches.

Carburizing depth HTÄ after macroetching:
[1)] 30 ø –36 ø – 0,09 d

Case hardening depth EHT 550 HV 3:
[2)] 30 – 36 ø – 0,05 d

KHV Chain couplings

Chain coupling for individual chain lengths HV and DS.
The chain couplings have the same technological characteristics as the corresponding highly wear resistant chains.
Pay attention that the couplings should be assembled and installed according to the instructions included in the packaging.
These couplings can only be mounted as vertical links.
Run as vertical links over sprockets, plain and grooved wheels.

Surface finish: shotblasted and waxed

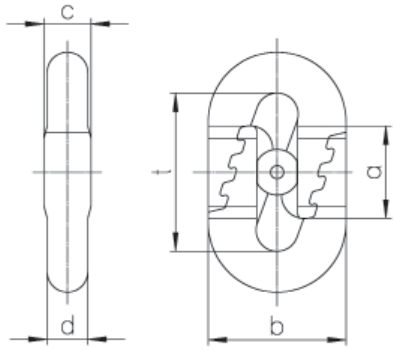

KHV Chain couplings

Type	d [mm]	t [mm]	a [mm]	b [mm]	c [mm]	Weight [kg/pc.]
KHV 22 x 86	22	86	58	74	27	1,70
KHV 26 x 100	26	100	62	87	30	2,20
KHV 30 x 120	30	120	70	105	36	3,00
KHV 34 x 136	34	136	82	117	40	4,70
KHV 38 x 144	38	144	95	134	47	5,50

Scope of delivery
2 pcs. KHV-halves, 2 pcs. safety pins and safety screw or 1 pc. locking pin and safety pin DIN 1481

Example of the order
20 pcs. chain couplings KHV 22 x 86

VHV Connecting links

Connecting link for individual chain lengths HV and DS.
The connecting links have the same technological characteristics as the corresponding highly wear resistant chains.
Pay attention that the connecting links should be assembled and installed according to the instructions. These connecting links are mounted as vertical links in bucket elevators with back mounted buckets.
For positive discharge bucket elevators the connecting links have to be installed as horizontal links.

Surface finish: shotblasted and waxed

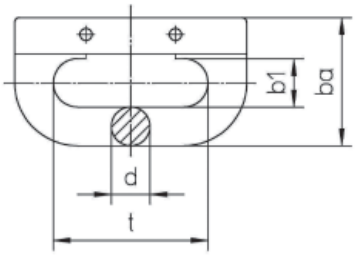

VHV Connecting links	Type	d [mm]	t [mm]	bi [mm]	ba [mm]	Pin D x L	Weight [kg/pc.]
	VHV 14 x 50	14	50	16	46	4 x 14	0,25
	VHV 16 x 64	16	64	20	54	5 x 16	0,40
	VHV 19 x 75	19	75	22	65	5 x 20	0,65
	VHV 19 x 120	19	120	22	65	5 x 20	0,85
	VHV 22 x 86	22	86	26	76,5	6 x 22	1,00
	VHV 26 x 100	26	100	31	87	8 x 26	1,50
	VHV 30 x 120	30	120	36	102	10 x 32	2,55
	VHV 34 x 136	34	136	39,5	112	12 x 36	3,70

Scope of delivery
Scope of delivery: connecting link, locking plate and 2 pcs. safety pins DIN 1481

Example of the order
20 pcs. connecting links VHV 22 x 86 G40E10

RHV Drive sprockets

Sprockets for use with HV and DSZ - round steel chains with replaceable and adjustable individual teeth, made from MnCr alloyed steel, case hardened – highly wear resistant. Sprockets are welded steel fabrications, any number of teeth or hub design is available. Keyways are machined in the hubs of matched wheels to ensure precise alignment of the teeth. Hub design, bore diameter and key size can be specified by the customer. Shimplates can be fitted to adapt the pitch circle dia. of the sprocket to a chain lengthened due to wear in the interlink points of contact. This ensures continued smooth running of the chain over the sprocket and the maximum use of the case hardened layer in the chain. Shimplates and new teeth can be mounted without disassembly the chain.

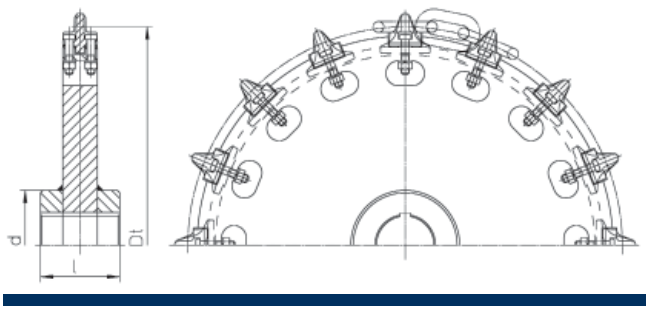

RHV Drive sprockets	Type	Chain d x t	No. of teeth Z*	Pitch circle-ø Dt [mm]	Standard values d**	Standard values l**	Weight [kg/pc.]
	RHV 14/16-50	14 x 50	16	510	150	110	53,00
	RHV 14/20-50	14 x 50	20	637	150	120	79,00
	RHV 16/15-64	16 x 64	15	612	180	120	84,00
	RHV 16/17-64	16 x 64	17	694	180	140	107,00
	RHV 16/18-64	16 x 64	18	734	180	140	123,00
	RHV 16/20-64	16 x 64	20	816	180	140	151,00
	RHV 19/15-75	19 x 75	15	717	200	150	134,00
	RHV 19/17-75	19 x 75	17	813	200	150	170,00
	RHV 19/19-75	19 x 75	19	908	200	150	214,00
	RHV 22/15-86	22 x 86	15	823	220	170	200,00
	RHV 22/16-86	22 x 86	16	878	220	170	224,00
	RHV 22/17-86	22 x 86	17	932	250	170	245,00
	RHV 22/18-86	22 x 86	18	986	250	170	280,00
	RHV 26/15-100	26 x 100	15	956	270	200	294,00
	RHV 26/16-100	26 x 100	16	1.020	270	200	330,00
	RHV 26/17-100	26 x 100	17	1.084	270	200	355,00
	RHV 26/19-100	26 x 100	19	1.211	300	220	468,00
	RHV 30/14-120	30 x 120	14	1.072	300	220	424,00
	RHV 30/16-120	30 x 120	16	1.225	300	220	572,00
	RHV 30/17-120	30 x 120	17	1.300	320	240	648,00
	RHV 34/14-136	34 x 136	14	1.214	350	240	640,00
	RHV 34/15-136	34 x 136	15	1.301	350	240	760,00
	RHV 34/16-136	34 x 136	16	1.387	350	240	900,00
	RHV 38/14-144	38 x 144	14	1.286	350	280	930,00
	RHV 38/15-144	38 x 144	15	1.378	400	280	1.100,00
	RHV 38/16-144	38 x 144	16	1.469	400	280	1.280,00

* Any other number of teeth on request.
** Hub length and hub diameter can be specified by the customer.

Example of the order
2 pcs. drive sprockets RHV 22/15-86 – ready to install
for chain 22 x 86, No. of teeth z = 15
Hub length central l = 170 mm (85 + 85)
Hub bore dia. = 140 H7 and keyway acc. to DIN 6885

EHV Individual teeth

Individual EHV made from MnCr - alloyed steel, case hardened – highly wear resistant; surface hardness 800 HV10. The individual teeth can be adjusted with shimplates to adapt the pitch circle diameter of the RHV – sprocket to a chain lengthened due to wear in the inter-link points of contact. This ensures continued smooth running of the chain.

Surface finish: shotblasted and waxed

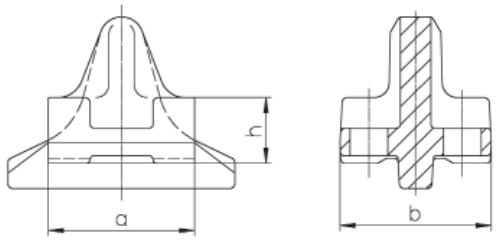

EHV Individual teeth	Type	a [mm]	b [mm]	h [mm]	Srew*	Weight apprx. [kg/pc.]
	EHV 14 x 50	40	40	19	M 8 x 40	0,22
	EHV 16 x 64	48	48	23	M 10 x 50	0,40
	EHV 19 x 75	58	58	26	M 14 x 60	0,60
	EHV 22 x 86	68	70	30	M 16 x 70	1,10
	EHV 26 x 100	76	78	36	M 18 x 70	1,50
	EHV 30 x 120	90	90	42	M 20 x 90	2,50
	EHV 34 x 136	105	105	48	M 24 x 100	4,00
	EHV 38 x 144	110	110	54	M 24 x 110	5,50

* Mounting parts: hex. socket head cap screw DIN 7984 - 8.8; spring washer DIN 127 and hex. nut DIN 934 - 8. Individual teeth with shimplates the screw length has to be advised.

Scope of delivery
Individual teeth EHV with or without mounting screws and nuts

Example of the order
30 pcs. individual teeth EHV 22 x 86 – without mounting screws and nuts

UHV-G Tail wheels

Tail wheels for use with HV and DSZ - round steel chains with BHV - bucket attachment. The hubs and segmented rims are fabricated and machined, allowing dimensional flexibility for the outside diameter. Hub design, bore diameter and key size can be specified by the customer. The guide disc diameter is adapted to the wheel- and bucket size. With this system no additional loading is required at the tail section and the chain runs freely over the tail wheels. This reduces the chain pull and the pressure on the interlink points of contact thereby reducing chain wear and increasing chain life.

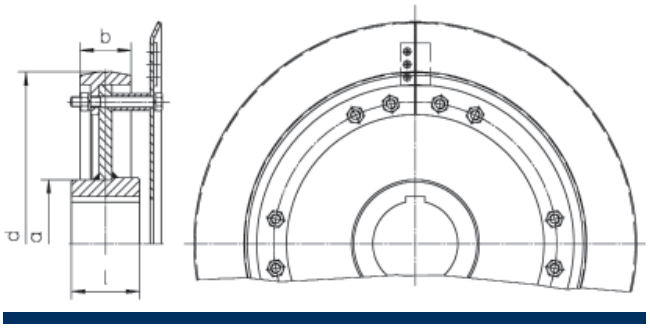

UHV-G Tail wheels	Type	Chain d x t	d [mm]	b [mm]	a [mm]	l [mm]	No. of teeth driving sprocket	Weight [kg/pc.]
	UHV-G 14/465	14 x 50	465	90	120	100	16	56,00
	UHV-G 14/590	14 x 50	590	90	120	100	20	83,00
	UHV-G 16/560	16 x 64	560	110	120	100	15	84,00
	UHV-G 16/640	16 x 64	640	110	150	120	17	106,00
	UHV-G 16/680	16 x 64	680	110	150	120	18	117,00
	UHV-G 16/760	16 x 64	760	110	150	120	20	140,00
	UHV-G 19/655	19 x 75	655	110	150	120	15	124,00
	UHV-G 19/750	19 x 75	750	110	150	120	17	156,00
	UHV-G 19/850	19 x 75	850	110	150	120	19	194,00
	UHV-G 22/750	22 x 86	750	140	150	120	15	189,00
	UHV-G 22/805	22 x 86	805	140	150	120	16	212,00
	UHV-G 22/860	22 x 86	860	140	150	120	17	236,00
	UHV-G 22/915	22 x 86	915	140	180	140	18	265,00
	UHV-G 26/870	26 x 100	870	170	180	140	15	280,00
	UHV-G 26/935	26 x 100	935	170	180	140	16	316,00
	UHV-G 26/1000	26 x 100	1000	170	200	150	17	355,00
	UHV-G 26/1125	26 x 100	1125	170	220	170	19	433,00
	UHV-G 30/970	30 x 120	970	190	180	140	14	354,00
	UHV-G 30/1125	30 x 120	1125	190	220	170	16	454,00
	UHV-G 30/1200	30 x 120	1200	190	220	170	17	505,00
	UHV-G 34/1100	34 x 136	1100	190	220	170	14	488,00
	UHV-G 34/1185	34 x 136	1185	190	220	170	15	551,00
	UHV-G 34/1278	34 x 136	1275	190	220	170	16	625,00
	UHV-G 38/1160	38 x 144	1160	210	250	200	14	590,00
	UHV-G 38/1250	38 x 144	1250	210	250	200	15	665,00
	UHV-G 38/1340	38 x 144	1340	210	250	200	16	755,00

Any other sizes on request.
Hub length and hub diameter can be specified by the customer.

Scope of delivery
Tail wheel UHV-G with or without guide disc

Example of the order
2 pcs. tail wheels UHV-G 22/750 with guide disc – ready to install
for chain 22 x 86, outside diameter = 750 mm
Hub length central l = 170 mm (85 + 85)
Hub bore dia. = 140 H7 and keyway acc. to DIN 6885

SEG-A, SEG-E and SEG
Plain segmented chain wheels

Plain segmented chain wheels for use with HV and DS – round steel chains resp. chain ends acc. to DIN 764 and DIN 766 for back mounted buckets. Plain segmented chain wheels SEG-A, SEG-E and SEG with steel hub and cleaning slots, are welded steel fabrications. Bore diameter and key size as specified by the customer.
SEG-A with replaceable hardfaced steel segments – highly wear resistant, surface hardness min. 55 HRC.
SEG-E with replaceable case hardened steel segments – highly wear resistant, surface hardness min. 700 HV10.
SEG with replaceable steel segments
Plain segmented chain wheels SEG-A and SEG-E especially suitable for the drive- and SEG-E resp. SEG for the tail unit.

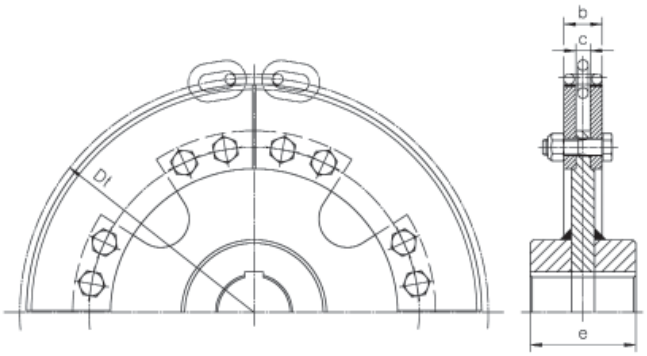

SEG-A, SEG-E and SEG
Plain segmented chain wheels

Type	Chain diameter	Pitch circle diameter	e [mm]	b [mm]	c [mm]	No. of segments	Weight [kg/pc.]
SEG-… 13/500	13 + 14	500	100	48	18	8	50,00
SEG-… 16/500	16	500	100	58	22	8	52,00
SEG-… 16/630	16	630	160	58	22	8	115,00
SEG-… 16/710	16	710	160	58	22	8	165,00
SEG-… 16/8800	16	800	190	58	22	8	290,00
SEG-… 20/500	19 + 20	500	100	68	28	8	56,00
SEG-… 20/630	19 + 20	630	160	68	28	8	120,00
SEG-… 20/710	19 + 20	710	160	68	28	8	170,00
SEG-… 23/630	22 + 23	630	160	80	30	8	125,00
SEG-… 23/710	22 + 23	710	160	80	30	8	170,00
SEG-… 23/800	22 + 23	800	160	80	30	8	225,00
SEG-… 23/900	22 + 23	900	190	80	30	8	280,00
SEG-… 23/1000	22 + 23	1000	200	80	30	8	350,00
SEG-… 26/710	26	710	160	94	34	8	180,00
SEG-… 26/800	26	800	160	94	34	8	240,00
SEG-… 26/900	26	900	190	94	34	8	310,00
SEG-… 26/1000	26	1000	200	94	34	8	375,00
SEG-… 30/900	30	900	190	110	40	8	300,00
SEG-… 30/1000	30	1000	200	110	40	8	395,00
SEG-… 30/1250	30	1250	220	110	40	8	640,00
SEG-… 36/1250	34 + 36	1250	220	116	46	8	680,00

Any other sizes on request.

Example of the order
2 pcs. drive-plain segmented chain wheels SEG-A 23/800 STN
for chain 22 x 86, pitch circle dia. = 800 mm
Hub length central e = 160 mm (80 + 80)
Hub bore dia. = 150 H7 and keyway acc. to DIN 6885

SR and SUR
Plain segmented chain wheels

Plain segmented chain wheels for use with HV and DS - round steel chains resp. chain ends acc. to DIN 764 and DIN 766. Drive - and tail wheels with replaceable segments made from high resistant chilled cast iron; hardness 400 - 450 HB30; many times the service life of gray cast wheels. The segments can be replaced without demounting the chain. Chain wheels SR are used for back mounted buckets; Chain wheels SUR are used for back mounted buckets as well side mounted buckets with chain shackles acc. to DIN 5699. Hubs are made from gray cast GGN without cleaning slots resp. steel hub STN with cleaning slots. The max. bore diameter is limited for gray cast hubs GGN and has to be specified; for larger bore diameters steel hubs STN must be used.
Bore diameter and key size as specified by the customer.

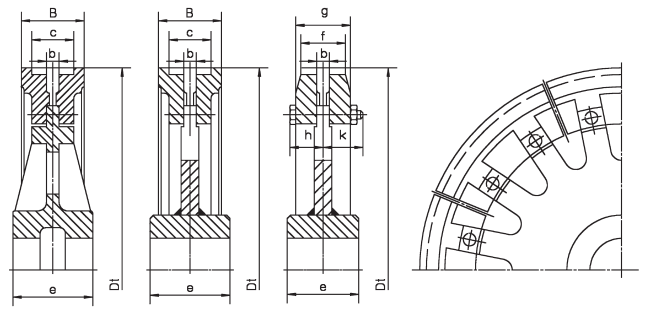

SR and SUR Plain segmented chain wheels	Type	Chain d	Pitch circle diame-ter Dt*	No. of seg-ments	b [mm]	c	B	e	f	g	h	k	Weight without cleaning slots [kg/pc.]	Weight with cleaning slots [kg/pc.]
	SR 13/500*	13 + 14	500	8 **	18	52	90	100	56	60	31	59	62,00	54,00
	SR 16/500*	16	500	8 **	22	62	100	100	62	66	34	66	62,00	54,00
	SR 16/630*	16	630	12	22	62	120	160	62	66	34	66	135,00	120,00
	SR 16/710	16	710	12	22	62	130	160					195,00	175,00
	SR 16/800	16	800	12	22	96	132	160					260,00	240,00
	SR 20/500*	19 + 20	500	8 **	28	80	118	100	74	80	44	70	70,00	60,00
	SR 20/630*	19 + 20	630	12	28	80	130	160	74	80	44	81	140,00	125,00
	SR 20/710*	19 + 20	710	12	28	80	130	160	74	80	44	81	200,00	180,00
	SR 23/630	22 + 23	630	12	30	90	140	160					145,00	130,00
	SR 23/710*	22 + 23	710	12	30	90	140	160	84	90	49	86	200,00	180,00
	SR 23/800*	22 + 23	800	12	30	90	140	160	84	90	49	86	265,00	245,00
	SR 23/900	22 + 23	900	16	30	95	145	190					340,00	325,00
	SR 23/1000	22 + 23	1000	16	30	104	140	200					430,00	415,00
	SR 26/710	26	710	12	34	114	164	160					220,00	200,00
	SR 26/800*	26	800	12	34	110	160	160	94	100	54	91	270,00	250,00
	SR 26/900*	26	900	16	34	110	170	190	94	100	54	91	350,00	335,00
	SR 26/1000	26	1000	16	36	120	180	200					445,00	430,00
	SR 30/900*	30	900	16	40	116	176	190	114	120	63	102	360,00	345,00
	SR 30/1000*	30	1000	16	40	125	185	200	114	120	63	102	450,00	435,00
	SR 30/1250*	30	1250	16	40	125	185	220	114	120	63	102	710,00	700,00
	SR 36/1250*	34 + 36	1250	16	46	135	200	220		135	68	106	740,00	730,00

Any other sizes on request.
* For this wheel sizes, type SUR segments without flange can be supplied with gray cast hub GGN or steel hub STN
** Dimensions for SR wheels; for SUR 13/500, SUR 16/500 and SUR 20/500: number of segments = 12 pcs.

Example of the order
2 pcs. drive-plain segmented chain wheel SR 23/800 STN
for chain 23 x 80, pitch circle dia. = 800 mm
Hub length central e = 160 mm (80 + 80)
Hub bore dia. = 150 H7 and keyway acc. to DIN 6885

SES-A, SES-E and SES
Plain segmented chain wheels

Plain segmented chain wheels for use with HV and DS – round steel chains resp. chain ends acc. to DIN 764 and DIN 766 for side mounted buckets. Plain segmented chain wheels SES-A, SES-E and SES with steel hub and cleaning slots, are welded steel fabrications. Bore diameter and key size as specified by the customer.
SES-A with replaceable hardfaced steel segments – highly wear resistant, surface hardness min. 55 HRC.
SES-E with replaceable case hardened steel segments – highly wear resistant, surface hardness min. 700 HV10.
SES with replaceable steel segments.
Plain segmented chain wheels SES-A and SES-E especially suitable for the drive- and SES-E resp. SES for the snub wheels and tail unit.

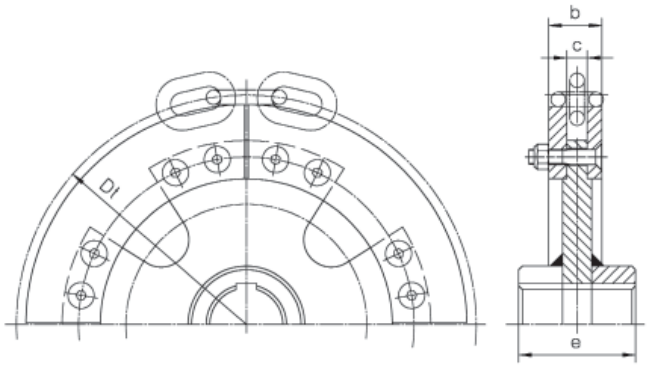

SES-A, SES-E, SES
Plain segmented chain wheels

Type	Chain diameter	Pitch circle diameter Dt*	e [mm]	b [mm]	c [mm]	No. of segments	Weight [kg/pc.]
SES-… 13/500	13 + 14	500	100	47	17	8	50,00
SES-… 16/500	16	500	100	56	20	8	52,00
SES-… 16/630	16	630	160	56	20	8	115,00
SES-… 16/710	16	710	160	56	20	8	165,00
SES-… 16/800	16	800	190	56	20	8	290,00
SES-… 18/500	18	500	100	62	22	8	56,00
SES-… 18/630	18	630	160	62	22	8	120,00
SES-… 18/710	18	710	160	62	22	8	170,00
SES-… 20/500	18 + 20	500	100	65	25	8	56,00
SES-… 20/630	18 + 20	630	160	65	25	8	120,00
SES-… 20/710	18 + 20	710	160	65	25	8	170,00
SES-… 23/630	22 + 23	630	160	78	28	8	125,00
SES-… 23/710	22 + 23	710	160	78	28	8	170,00
SES-… 23/800	22 + 23	800	160	78	28	8	225,00
SES-… 23/900	22 + 23	900	190	78	28	8	280,00
SES-… 23/1000	22 + 23	1000	200	78	28	8	350,00
SES-… 26/710	26	710	160	91	31	8	180,00
SES-… 26/800	26	800	160	91	31	8	240,00
SES-… 26/900	26	900	190	91	31	8	310,00
SES-… 26/1000	26	1000	200	91	31	8	375,00
SES-… 30/900	30	9000	190	106	36	8	300,00
SES-… 30/1000	30	1000	200	106	36	8	395,00
SES-… 30/1250	30	1250	220	106	36	8	640,00
SES-… 36/1250	34 + 36	1250	220	116	46	8	680,00

Any other sizes on request.

Example of the order
2 pcs. drive-plain segmented chain wheels SES-A 23/800 STN
for chain 22 x 86, pitch circle dia. = 800 mm
Hub length central e = 160 mm (80 + 80)
Hub bore dia. = 150 H7 and keyway acc. to DIN 6885

BR Plain segmented chain wheels

Plain segmented chain wheels for use with HV and DS - round steel chains resp. chain ends acc. to DIN 764 and DIN 766. Drive-, tail- and snub wheels with replaceable segments made from high resistant chilled cast iron; hardness 400 - 450 HB30; many times the service life of gray cast wheels. The segments can be replaced without demounting the chain. Chain wheels BR are used for side mounted buckets; Hubs are made from gray cast GGN without cleaning slots resp. steel hub STN with cleaning slots. The max. bore diameter is limited for gray cast hubs GGN and has to be specified; for larger bore diameters steel hubs STN must be used. Bore diameter and key size as specified by the customer.

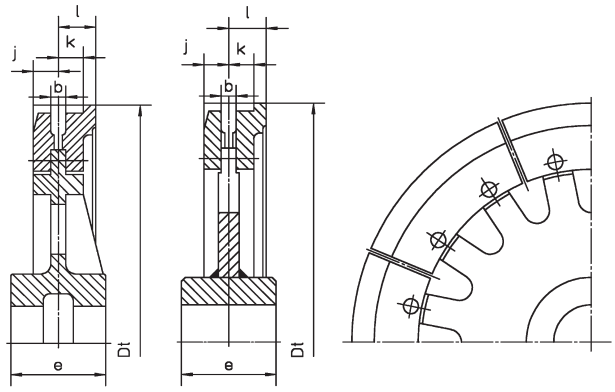

BR Plain segmented chain wheels	Type	Chain d	Pitch circle diameter Dt*	No. of seg-ments	b [mm]	e	j	k	l	Weight with steel hub [kg/pc.]	Weight with cast hub [kg/pc.]
	BR 13/500	13 + 14	500	8	17	100	23	27	42	56,00	50,00
	BR 16/500	16	500	8	20	100	28	33	47	58,00	52,00
	BR 16/630	16	630	12	20	160	28	32	47	130,00	115,00
	BR 16/710	16	710	12	21	160	32	45	65	185,00	165,00
	BR 16/900	16	900	16	20	190	28	32	47	310,00	290,00
	BR 20/500	19 + 20	500	8	25	100	33	39	58	62,00	56,00
	BR 20/630	19 + 20	630	12	26	160	35	47	62	135,00	120,00
	BR 20/710	19 + 20	710	12	26	160	35	47	67	190,00	170,00
	BR 20/900	19 + 20	900	16	26	190	35	47	67	315,00	300,00
	BR 20/1000	19 + 20	1000	16	26	200	32	50	68	350,00	330,00
	BR 23/630	22 + 23	630	12	30	160	40	50	70	140,00	125,00
	BR 23/710	22 + 23	710	12	30	160	40	52	70	190,00	170,00
	BR 23/800	22 + 23	800	12	30	160	40	52	70	245,00	225,00
	BR 23/1000	22 + 23	1000	16	30	200	40	52	70	370,00	350,00
	BR 26/630	26	630	12	32	160	45	55	80	145,00	130,00
	BR 26/710	26	710	12	32	160	45	55	80	200,00	180,00
	BR 26/900	26	900	16	32	190	45	54	84	325,00	310,00
	BR 26/1000	26	1000	16	32	200	45	58	88	390,00	375,00
	BR 26/1250	26	1250	16	32	220	46	62	92	630,00	620,00
	BR 30/710	30	710	12	36	160	50	65	80	205,00	185,00
	BR 30/800	30	800	12	36	160	50	65	80	260,00	240,00
	BR 30/1000	30	1000	16	36	200	53	65	80	415,00	395,00
	BR 30/1250	30	1250	16	36	220	53	65	80	650,00	640,00
	BR 36/1250	34 + 36	1250	16	44	220	63	78	98	690,00	680,00

Any other sizes on request.

Example of the order
2 pcs. drive-plain segmented chain wheel BR 23/800 STN
for chain 22 x 86, pitch circle dia. = 800 mm
Hub length central e = 160 mm (80 + 80)
Hub bore dia. = 150 H7 and keyway acc. to DIN 6885

BDD-S Bucket attachments

Bucket attachment suitable for HV- and DS- round steel chains with chain sprockets RHV and plain segmented chain wheels, suitable for back mounted buckets, simple assembly and disassembly on the chain, pre-assembled bucket attachment BDD-S ready for the installation on the chain, no additional connecting screw – self locking, two identical halves, complete forged incl. the bolts and highly wear resistant hardened at the chain contact areas. Mounting dimensions of the BDD-S attachment correspond to the standard shackles, existing chain end and shackle system can be converted. The same buckets and chain wheels can usually be used. Higher service safety because the BDD-S attachment don't have to transmit any chain pull.

Surface finish: natural black and waxed

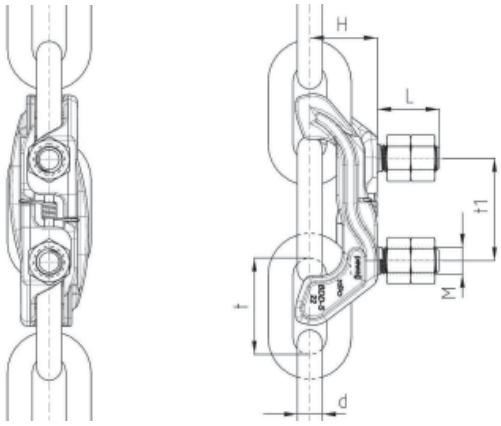

BDD-S Bucket attachments	Type	Chain d x t	t1 [mm]	M [mm]	L [mm]	H [mm]	Weight [kg/pc.]
	BDD-S 19x75	19 x 75	80	20	45	53	1,60
	BDD-S 22x86	22 x 86	91	24	55	60	2,60
	BDD-S 26x100	26 x 100	105	24	55	71	4,10
	BDD-S 30x120	30 x 120	126	30	65	84	7,00
	BDD-S 34x136	34 x 136	147	36	75	96	9,00

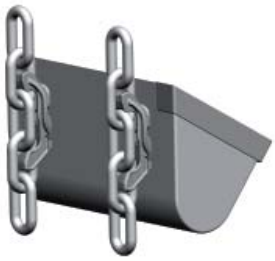

Scope of delivery
2 pcs. pre-assembled BDD-S clamp halves and 4 pcs. hex nuts DIN 934-8.

Example of the order
80 pcs. bucket attachments BDD-S 22 x 86

BHV Bucket attachments

Bucket attachment suitable for HV and DSZ – chain with sprockets RHV and tail wheels UHV-G; for back mounted buckets; strong two – link attachment with weld-on plates and pins for high capacity bucket elevators – highly wear resistant, simple bucket assembly on the chain. Weld-on plates made from material C45 with inductive hardened bore holes, case hardened pins made from MnCr- alloyed steel, with safety pins. Use welding jig to tack on and weld the plates on the buckets acc. to the assembly instructions.

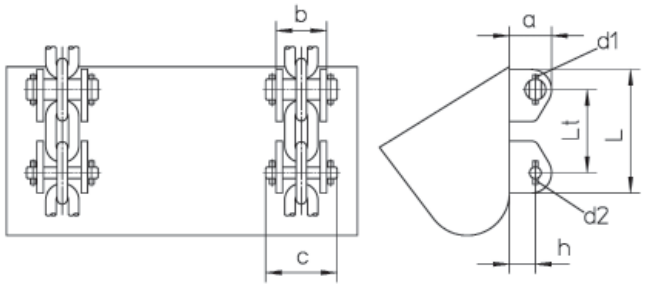

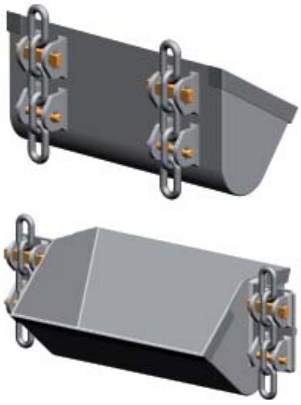

BHV Bucket attachments	Type	Chain d x t	Lt [mm]	L [mm]	a [mm]	b [mm]	c [mm]	h [mm]	d1 d x l	d2 d x l	Weight [kg/pc.]
	BHV 14 x 50	14 x 50	100	150	55	66	93	33	6 x 40	6 x 30	2,40
	BHV 16 x 64	16 x 64	128	190	65	78	110	40	8 x 45	8 x 36	4,10
	BHV 19 x 75	19 x 75	150	230	75	92	130	45	10 x 55	10 x 40	6,60
	BHV 22 x 86	22 x 86	172	260	85	110	158	50	13 x 60	13 x 45	10,00
	BHV 26 x 100	26 x 100	200	290	100	123	170	61	13 x 70	13 x 45	13,20
	BHV 30 x 120	30 x 120	240	340	125	139	185	75	13 x 80	13 x 60	16,20
	BHV 34 x 136	34 x 136	272	392	140	153	210	82	16 x 90	16 x 60	21,70
	BHV 38 x 144	38 x 144	288	418	155	182	245	90	16 x 90	16 x 65	29,50

Scope of delivery for one bucket
4 pcs. weld-on plates with large bore hole
4 pcs. weld-on plates with small bore hole
2 pcs. flat pins with 2 pcs. safety pins DIN 1481
2 pcs. round pins with 2 pcs. safety pins DIN 1481
(only as individual parts also available)

Example of the order
80 pcs. bucket attachments BHV 22 x 86

BDS-S and BDS
Bucket attachments

Bucket attachment suitable for HV- and DS- round steel chains with chain sprockets RHV and plain segmented chain wheels, suitable for back mounted buckets, simple assembly and disassembly on the chain, pre-assembled bucket attachment BDS-S ready for the installation on the chain, no additional connecting screw – self locking or as usual BDS – halves with connecting bolt and safety nut. Two identical halves, complete forged incl. the bolts and heat treated. Mounting dimensions of the BDS-S and BDS attachment correspond to the standard shackles, existing chain end and shackle system can be converted. The same buckets and chain wheels can usually be used. Higher service safety because the BDS-S/BDS attachment don't have to transmit any chain pull. No wear part – can be reused.

Surface finish: natural black and waxed

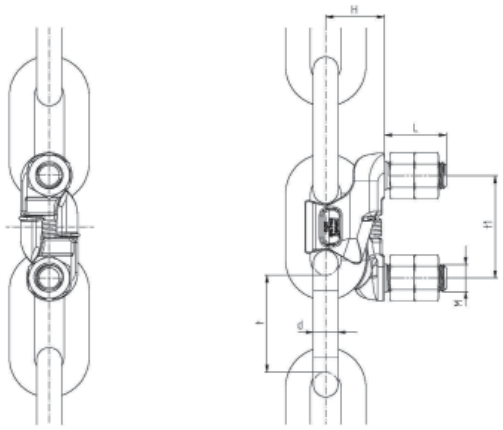

BDS-S and BDS Bucket attachments	Type	Chain d x t	t1 [mm]	M [mm]	L [mm]	H [mm]	Attach-ment screw	Weight [kg/pc.]
	BDS 14 x 50	14 x 50	56	14	35	34	M 10 x 30	0,50
	BDS 16 x 64	16 x 64	63	16	40	37	M 12 x 30	0,70
	BDS 19 x 75	19 x 75	80	20	45	47	M 14 x 40	1,20
	BDS 22 x 86	22 x 86	91	24	55	52	M 16 x 45	2,00
	BDS 26 x 100	26 x 100	105	24	55	60	M 16 x 45	2,50
	BDS 30 x 120	30 x 120	126	30	65	70	M 20 x 55	4,20
	BDS 34 x 136	34 x 136	147	36	75	81	M 20 x 60	6,50

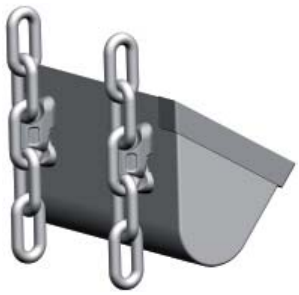

Scope of delivery
2 pcs. pre-assembled BDS-S clamp halves and 4 pcs. hex nuts DIN 934-8
2 pcs. BDS clamp halves, hex. socket head cap screw DIN 912-8.8, locking nut DIN 980-8 and 4 pcs. hex. nuts DIN 934-8

Example of the order
80 pcs. bucket attachments BDS 22 x 86

SDD Bucket attachments

Bucket attachment suitable for HV and DS - round steel chains and for side mounted buckets, runs over sprockets RHV and plain segmented chain wheels; simple assembly and disassembly on the chain;
4 halves, forged and case hardened, 2 halves welded to plate, existing chain end and shackle system can be converted, same chain wheels and buckets can usually be used. Higher service safety because the SDD attachment don´t have to transmit any chain pull.

Surface finish: shotblasted and waxed

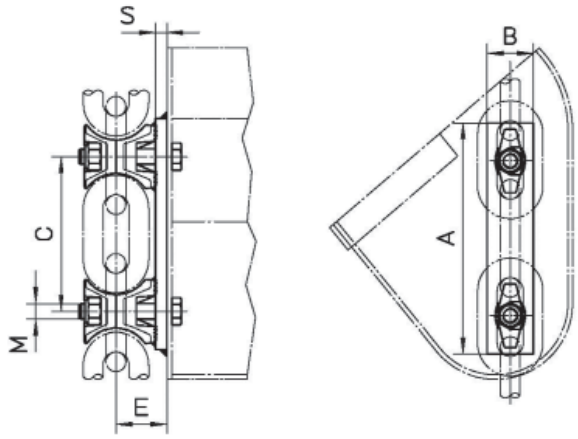

SDD Bucket attachments	Type	Chain d x t	E [mm]	A [mm]	B [mm]	C [mm]	S [mm]	Bolt M	Weight [kg/pc.]
	SDD 16 x 64	16 x 64	52	200	50	126	15	M 12	2,50
	SDD 19 x 75	19 x 75	67	230	60	148	20	M 14	3,50
	SDD 22 x 86	22 x 86	72	265	70	170	20	M 16	5,50
	SDD 26 x 100	26 x 100	80	300	80	196	20	M 20	7,00
	SDD 30 x 120	30 x 120	96	365	90	235	25	M 20	10,00
	SDD 34 x 136	34 x 136	111	410	100	268	30	M 24	14,00

* Any other sizes and dimensions E on request.

Scope of delivery
2 pcs. SDD-halves welded to plate, 2 pcs. locking SDD-halves,
2 pcs. hex. bolts DIN 931-8.8, 2 pcs. locking nuts DIN 980-8.
Bolt length has to be specified

Example of the order
80 pcs. bucket attachments SDD 22 x 86 with mounting bolts and nuts

SDS Bucket attachments

Bucket attachment suitable for HV and DS - round steel chains and for side mounted buckets, runs over sprockets RHV and plain segmented chain wheels; simple assembly and disassembly on the chain; two halves, forged and case hardened, alternativ one half welded to distance plate, existing chain end and shackle system can be converted, same chain wheels and buckets can usually be used. Higher service safety because the SDS attachment don´t have to transmit any chain pull.

Surface finish: shotblasted and waxed

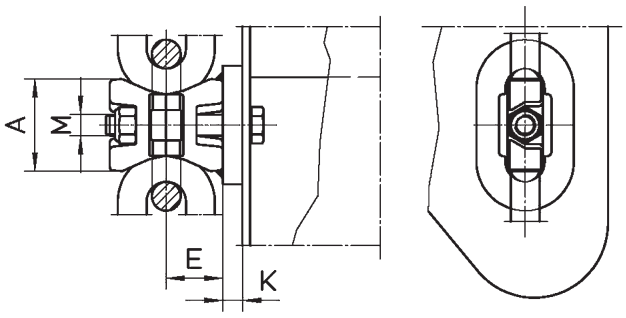

SDS Bucket attachments

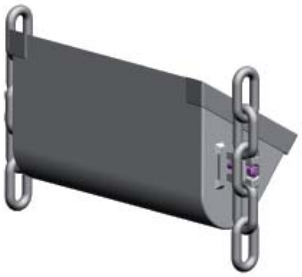

Type	Chain d x t	E* [mm]	A [mm]	M [mm]	K** [mm]	Weight [kg/pc.]
SDS 14 x 50	14 x 50	34	40	10	10	0,20
SDS 14 x 64	14 x 64	23,5	53	10	10	0,30
SDS 16 x 64	16 x 64	37	51	12	10	0,50
SDS 19 x 75	19 x 75	33,5	61	14	10	0,70
SDS 22 x 86	22 x 86	52	70	16	15	1,00
SDS 26 x 100	26 x 100	60	80	20	15	1,30
SDS 30 x 120	30 x 120	71	100	20	15	1,80

* Any other sizes and dimensions E on request.
** Recommended plate thickness.

Scope of delivery
2 pcs. SDS-halves, 1 pc. hex. bolt DIN 931-8.8, 1 pc. locking nut DIN 980-8.
Size of the distance plate and bolt length has to be specified

Example of the order
80 pcs. bucket attachments SDS 22 x 86 with mounting bolt and nut

DOB Round steel chains

Round steels chains DOB with HV and DS - round steel chains or chains acc. to DIN 764 and 766 with welded bolts; technical characteristics for the qualities see corresponding pages of the chain types. Bucket spacing and bolt size as specified by the customer, existing chain end and shackle system can be simple converted; for back and side mounted buckets, the same buckets and chain wheels can usually be used.

Surface finish: natural black and waxed

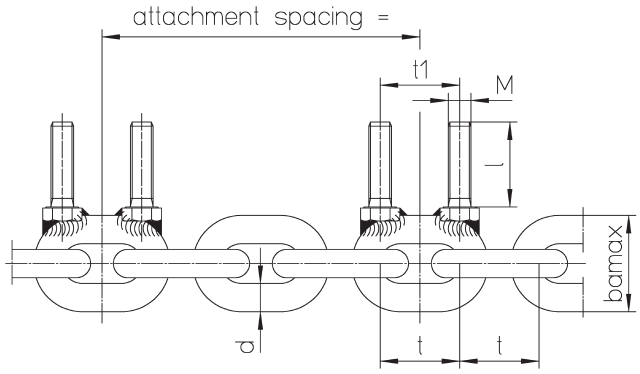

DOB Round steel chains	Chain d x t	Chain width ba [mm]	Standard length Number of links	Standard length Length [mm]	Quality grade G40 E10 Breaking load [kN]	Bucket spacing Number of links [mm]	Bucket spacing Leng-th [mm]	Bucket spacing Starting on	Weld on bolt M [kn]	Weld on bolt l [kn]	Weld on bolt t1 [kn]
	20 x 56	72	151	8456	160	8	448	4th link	M 20	40	70

Scope of delivery
Round steel chain DOB with 2 pcs. locking nuts DIN 980-8 each DOB-link

Example of the order
16 pcs. DOB-chains A 20 x 56 G40E10 L = 151 links = 8456 mm each, supplied as matched pairs – M20x40x70/8

Chain shackles DIN 745

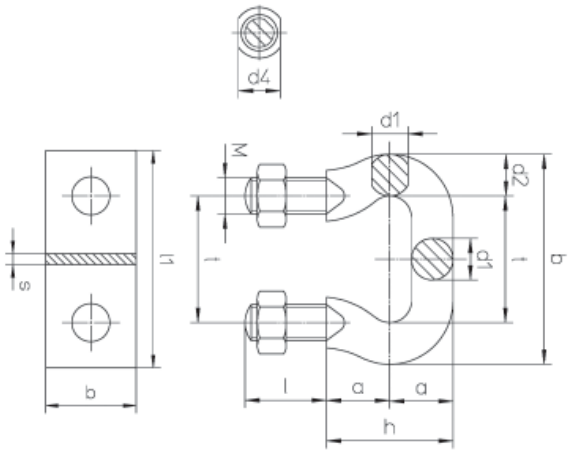

Suitable for connecting chain ends acc. to DIN 764 and DIN 766 and the attachment of the buckets for bucket elevators acc. to DIN 15251. For friction drive systems DIN standard recommends to use the next size up pitch chain shackle; chain shackles should only be used in connection with distance plates; drop forged, thread and collar machined; Material: made from heat treatable steel C45 and CrNi - alloyed steel, shackles C45vi are through hardened up to a strength of apprx. 1100 N/mm², the interlink points of contact are inductive hardened, surface hardness min. 600 HV10. Shackles G80E10vi are additional carburized, the interlink points of contact are inductive hardened, surface hardness min. 750 HV10.

Surface finish: oiled

Chain shackles DIN 745	t [mm]	a	b	d1	d2	d4	M	h	l	Weight* [kg/pc.]	Min. breaking load C45 vi [kN]	Min. breaking load G80 E10 vi **[kN]	Distance plate l1 [mm]	Distance plate b [mm]	Distance plate s [mm]	Weight [kg/pc.]
	45	20	73	11,5	14	12,5	M 10	40	25	0,15	76	80	75	30	5	0,08
	56	25	92	15	18	16,5	M 12	50	32	0,32	112	125	95	40	6	0,17
	63	30	105	18	21	20	M 16	60	40	0,55	142	150	110	40	6	0,18
	70	34	116	20	23	23	M 20	68	45	0,86	176	200	120	50	6	0,25
	80	37	132	23	26	25	M 20	74	45	1,08	230	250	130	50	6	0,27
	91	43	149	26	29	29	M 24	86	55	1,65	300	315	150	60	8	0,50
	105	50	173	30	34	31	M 24	100	55	2,20	395	425	165	60	8	0,56
	126	59	206	36	40	37	M 30	118	70	3,95	570	600	200	70	10	0,97
	147	68	239	42	46	42	M 30	136	70	5,50	775	850	230	80	12	1,15

* Incl. 2 pcs. hex. nuts without distance plate.
** Quality G80 E10 vi on request.

Scope of delivery
Chain shackle and 2 pcs. hex. nuts acc. to DIN 934

Example of the order
100 pcs. chain shackles 91 DIN 745 C45 vi

Quality grade	C45 vi	G80 E10 vi
Proof stress [N/mm²]	125	125
Breaking stress [N/mm²]	280	300
Surface hardness HV 10 min.	600	750
Hardening depth HTÄ …d min.	0,1 x d*	0,1 x d*
Hardening depth at interlink EHT 550 … d min.	0,06 x d*	0,06 x d*
Hardening depth EHT 550 HV 3 ... d min.	0,06	0,06

* Chain shackle dia. d1.

Chain shackles acc. to DIN 5699

Higher breaking loads in comparison with chain shackles acc. to DIN 745, which ensures the service safety. When replacing chain shackles DIN 745 with chain shackles DIN 5699 in existing bucket elevators with side mounted buckets pay attention that the chain center distance will increase.

Surface finish: oiled

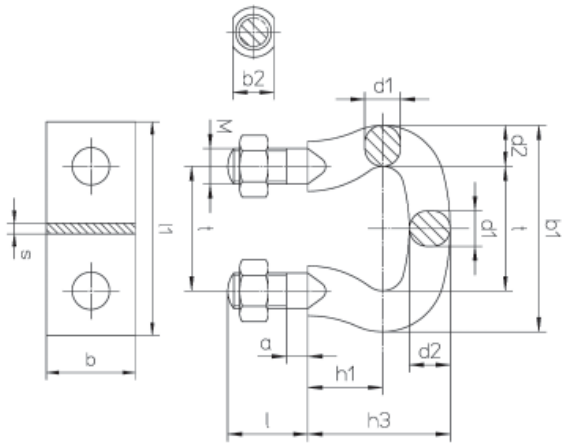

Chain shackles DIN 5699	t [mm]	a	b1	b2	d1	d2	M	h1	h3	l	Weight * [kg/pc.]	Min. breaking load C45 vi [kN]	Min. breaking load G80 E10 vi [kN]	Distance plate l1 [mm]	Distance plate b [mm]	Distance plate s [mm]	Weight [kg/pc.]
	35	8	59	11	10	12	M10	23	43	25	0,14	50	56	65	30	5	0,07
	45	8	75	13	13	15	M12	28	53	30	0,26	85	95	75	30	5	0,08
	56	10	92	17	16	18	M14	34	64	35	0,34	125	140	95	40	6	0,17
	63	10	105	20	18	21	M16	37	71	40	0,60	160	180	110	40	6	0,21
	70	12	116	23	20	23	M20	42	80	45	0,87	200	224	120	50	6	0,25
	80	12	132	25	23	26	M20	47	89	45	1,12	265	280	130	50	6	0,27
	91	14	149	29	26	29	M24	52	99	55	1,86	335	355	150	60	8	0,56
	105	14	173	31	30	34	M24	60	114	55	2,56	450	500	165	60	8	0,62
	126	18	206	37	36	40	M30	71	134	65	4,40	630	700	200	70	10	0,97
	147	22	241	42	42	47	M36	81	157	75	7,30	850	950	230	80	12	1,73

* Incl. 2 pcs. hex. nuts without distance plate.
** Quality G80 E10 vi on request.

Scope of delivery
Chain shackle and 2 pcs. hex. nuts acc. to DIN 934

Example of the order
100 pcs. chain shackles 91 DIN 5699 C45vi

Quality grade	C45 vi	G80 E10 vi
Proof stress [N/mm²]	125	125
Breaking stress [N/mm²]	280	300
Surface hardness HV 10 min.	600	750
Hardening depth HTÄ …d min.	0,1 x d*	0,1 x d*
Hardening depth at interlink EHT 550 … d min.	0,06 x d*	0,06 x d*
Hardening depth EHT 550 HV 3 ... d min.	0,06	0,06

* Chain shackle dia. d1.

Buckets acc. to DIN 15234

Steel elevator buckets of welded construction can be manufactured acc. to DIN - standards and any style specified by the customer, for heavy powder, coarse grain - and lumpy material. E.g. sand, cement, gravel, coal, etc. Buckets made from cast polymeric material are also available for medium operating conditions.

Bucket attachment with shackles (DIN 15236-4)

Style A
without reinforced

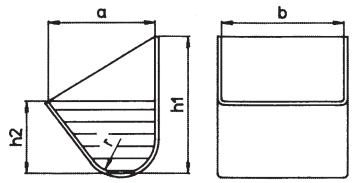

hatched aera = bucket capacity

Style B
with reinforced front edges

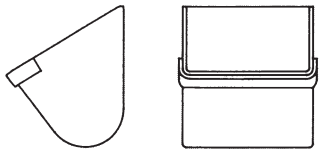

Style C
with reinforced edges on 3 sides

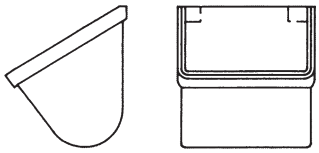

Style L
with rear wall strips

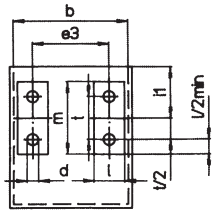

Style M
with rear wall plate

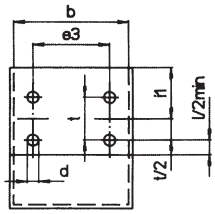

Style N
with side mounted attachment

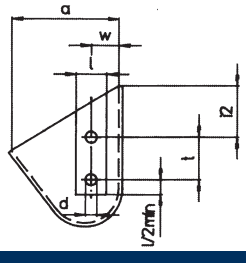

Width					Weight of a bucket style A kg = sheet metal gauge						Bucket capacity F x b litre	Bucket attachment: dimensions DIN 15236-4								
b	a	h1	h2	r								t	d [1]	e_3	i_1	m	$L_{min.}$	w	v [2]	i_2
		[mm]			2	3	4	5	6	8						[mm]				
160	140	180	95	45	1,38	2,08					1,5	56	15	100	67	95	40	36	6	67
160	160	200	106	50	1,59	2,39	3,18				1,9	56	15	100	75	95	40	40	6	75
200	160	200	106	50	1,85	2,80	3,76				2,4	63	17	125	75	110	40	40	6	75
250	180	224	118	56	2,49	3,77	4,96				3,7	63	17	160	85	110	40	45	8	85
250	200	250	132	63		4,36	5,82	7,27			4,6	63	17	160	95	110	40	50	8	95
315	200	250	132	63		5,09	6,82	8,59			5,8	70	21	200	95	120	50	50	8	95
400	224	280	150	71		7,03	9,40	11,80			9,4	80	21	250	106	130	50	56	10	106
500	250	315	170	80			12,80	16,10	19,40		14,9	91	25	315	118	150	60	63	10	118
630	280	355	190	90			17,60	22,10	26,60		23,5	105	25	400	132	165	60	70	10	132
800	315	400	212	100				30,60	36,90	49,60	37,3	126	31	500	150	200	70	80	10	150
1000	355	450	236	112				42,00	50,30	67,00	58,3	126	31	630	170	200	70	90	10	170
1250	400	500	265	125					68,50	91,90	92,0	147	37	800	190	230	80	100	12	190

[1] Bore hole dia. for chain shackle acc. to DIN 5699 and BDS bucket attachment.
[2] Max. thickness of rear wall strips L or rear wall plate M.

Example of the order
50 pcs. buckets C630 x 280 x 5 L91 DIN 15234

Assembly- and Maintainance Instructions

Assembly- and Maintainance Instructions

Instructions and Questionnaire

Assembly of the drive and tail wheels

Pay attention to maintaining the correct chain center distance. Head and tail shafts must be installed parallel and all the wheels must be in line.

Recommended assembly of the chain lengths

- Connect individual chain lengths with connecting links
- Install the connected chain lengths into the elevator casing
- Connect into an endless loop
- Assemble the bucket attachments and buckets
- Tension the assembled system

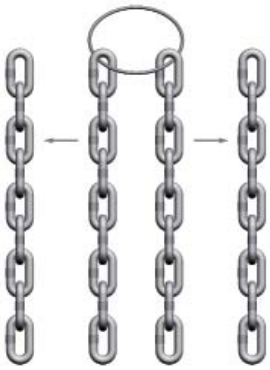

The chain lengths are supplied bundled in pairs. In order to avoid mixing up of the chain lengths, the wire for the bundling should only be opened in the course of the assembly; the chain lengths must be assembled in the conveyor lying parallel, this is the only way to guarantee that chain loops will be of the same length; if the chain lengths are mixed before installation the final links of every chain lengths are marked with the chain lengths number and are colour coded; it is possible to get the chain lenghts perfectly matched with the chain length numbers resp. the colour marking; during the assembly of the chain lengths please take care that the welds of the vertikal chain links point to the wheel center.

Pay attention that the chain couplings are installed in the correct position

Chain couplings KHV can only be mounted as vertical links for all bucket elevator systems. Connecting links VHV are installed as vertical links but for positive discharge bucket elevators only as horizontal links.

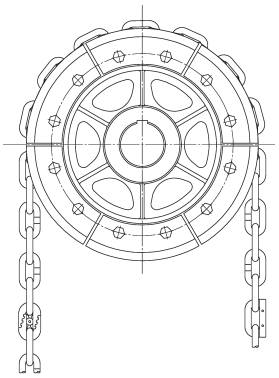

Shortening of the chain may be necessary to shorten the chain in order to obtain the exact required chain length of the make - up lengths, or if the chain lengthens due to wear. If chain shortening is necessary an even number of chain links (2, 4, 6, and so on) must be cut out from both chain loops. Links must be cut out with a cutting disc or a burner. Pay attention not damage or overheat the neighboring links.

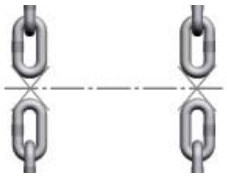

Assembly of the bucket attachments and buckets

Install on the vertical chain links in the required bucket spacing the pre-assembled BDD-S- and BDS-S- attachments, ensure parallel threaded studs and thighten with nuts and counternuts the buckets.

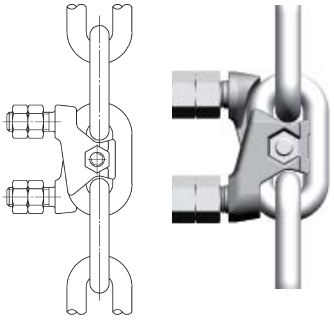

Locate and tighten with bolt and nut the BDS-halves on the vertical chain links in the required bucket spacing, Tighten the attachment screw which connects the BDS clamp halves to the specified torque. Assembly the buckets only when the BDS attachment is centrally snd securely fitted, tighten with nuts and counternuts.

Tack on BHV- weld on plates by means of welding jig, pay attention to correct distances between the plates and aligned bore holes. Install the buckets on the chain in the required bucket spacing with flat and round pins and secure the pins with the safety pins.

Stick electrode: ISO 2560: E 51 5 B110 20 (H)
EN 499: E 42 5B4 2 H5
AWS A5.1-ASME II/C, SFA5.1: E 7018-1

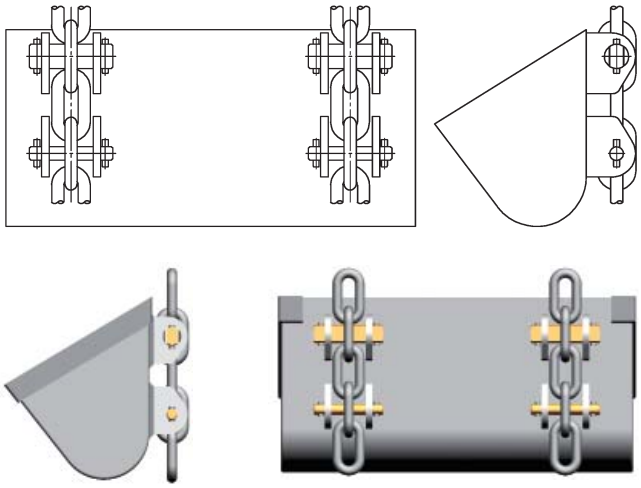

Weld on SDS/SDD with distance plate on bucket side wall, pay attention to correct position and alignment. Install the buckets on the vertical chain links in the required bucket spacing, insert 2nd SDS/SDD-locking halves and tighten the attachment bolts to the specified torque.

Stick electrode: ISO 2560: E 51 5 B110 20 (H)
EN 499: E 42 5B4 2 H5
AWS A5.1-ASME II/C, SFA5.1: E 7018-1

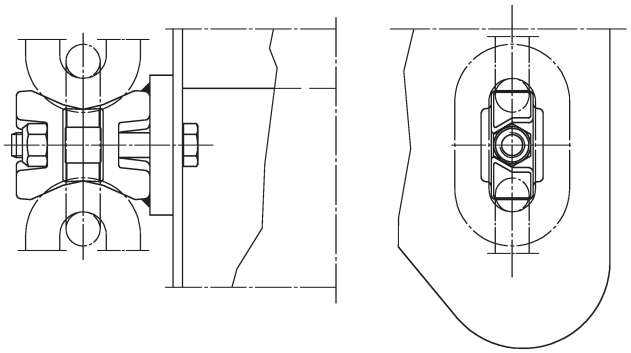

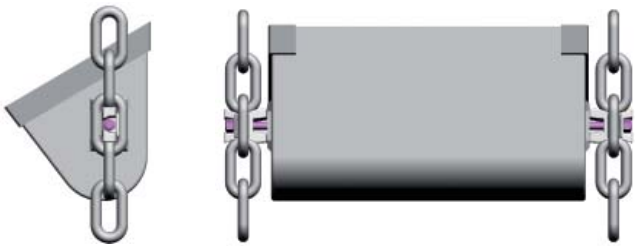

Chain shackles are connected with the chain ends to form an endless chain loop. Chain shackles should be used together with distance plates. All nuts must be tighten to the enclosed specified torque and secured with safety plates, spring washers or counter nuts to reduce the possibility of loose nuts.

The chain tension must be checked regularly. The BDS and the chain end + chain shackle system require a weight pretensioned tail station. Basically, the chain tension should only be as high as it really necessary for trouble-free operation. Both chain loops must be equally tensioned.

Thread size	Nm	Lbf/ft.
M 6	10	7
M 8	25	18
M 10	49	35
M 12	85	62
M 14	135	98
M 16	210	152
M 18	300	217
M 20	425	307
M 22	580	420
M 24	730	528
M 27	1.100	796
M 30	1.450	1.049
M 33	1.900	1.136
M 36	2.450	1.772

Tightening torque Nm for bolts and hex. nuts strength class 8.8 and 8; coefficient of sliding μ = 0,14

Excessive tensioning will increase the chain wear and reduce the chain life time.
The BHV-system requires basically no pretensioned tail station. The tail wheels can be raised from the chain loops with threaded rods but the tail wheels should still slightly sit on the chain loops. Guide discs or guide rails are necessary in the elevator boot.

The pitch circle dia. of the sprocket RHV is adapted with shimplates to the individual teeth. Shimplates and new teeth can be installed without disassembly the chain. The thickness of the shimplates can only be determined by measuring the chain lengthened due to wear. As soon as the case hardened layer is worn off the wear will increase rapidly. Chains and sprocket teeth will wear out under normal operating condition at the same time.
Shimplates should be fitted when the chain is lengthened due to wear by apprx. 2,5%. The replacement of chain with quality grade E10 is recommended by a chain wear of apprx. 3,5% and E14 by 5%. For friction drive systems the chain replacement should be carried out by an interlink wear of apprx. 5%. If both chain loops wear out equally the max. chain wear per link dia. of apprx. 1/5 of the new link dia. is admissible. As soon as the vertical links run onto the groove base of the chain wheels the segments should be replaced.

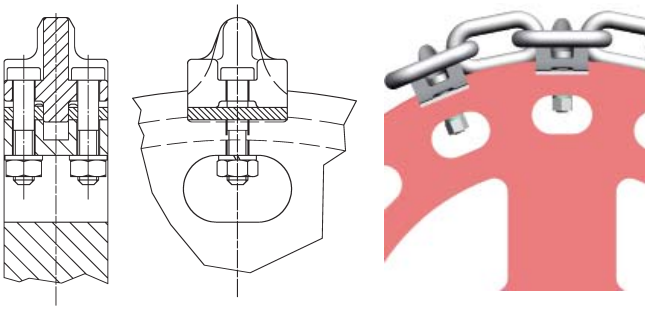

Pay attention to a uniform charging over the full width of the buckets. Both chain loops must be equally loaded due to conveying material and chain tractive forces. Asymetric loading on the chain loops lead sooner or later of an increase in pitch due to wear and to slanting buckets.
Round steel chains should be protected against overloading or blocking against coarse material by means of suitable safety clutches, shear pins etc. At specific intervals the chains, connecting links, attachments and chain wheels should be checked for damage, corrosion or unusual wear.
All screw connections should be checked for tight fit and retightened as necessary. When the round steel chain is replaced, the chain couplings must also be replaced.
No welding should be carried out on chains, connecting links or case hardened components.

Questionnaire
Bucket Elevators

Fax to: +43 (0) 3862 / 29 90-700

Company _____ **Date** _____

From _____

Phone _____ **Fax** _____

E-Mail _____

Name and No. of units _____

1. Material Handled

   Specific weight [kg/dm³] _____ Grain size [mm] _____

   Temperature [°C] _____ Moisture content _____

   Abrasiveness low ☐ normal ☐ high ☐

   Corrosiveness _____

   Chemical influences _____

2. Capacity [t/h] _____ or [m³/h] _____

   Chain speed [m/s] _____

3. Shaft centers [m] _____

4. Position of the bucket elevator

   vertical ☐ inclined [°] ☐

5. Type of the bucket elevator

   Centrifugal discharge ☐ Center discharge by gravity ☐ with snub wheel ☐

6. New installation ☐ Replacement component ☐ Modification ☐

   Reasons for the modification _____

7. Service hours per year _____

8. Power [kW] _____

9. Dimension of the casing [mm] A = _____ B = _____ C = _____

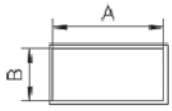

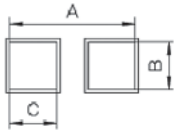

Questionnaire
Bucket Elevators

Fax to: +43 (0) 3862 / 29 90-700

10. Chain centers [mm] _____ X1 = _____ X2 = _____

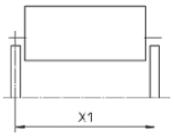

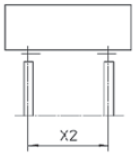

11. Bucket Elevator System

BDS System ☐

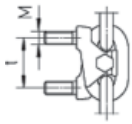

BDD-S System ☐

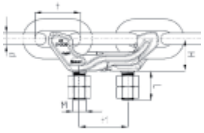

BHV System ☐

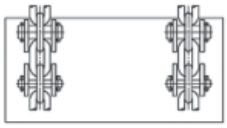

Chain ends and shackles ☐

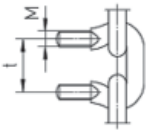

SDD-/SDS System ☐

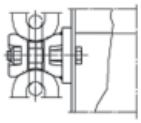

Shackle pitch [mm] _____ Thread [mm] _____ Shackle standard _____

12. Bucket size standard

Back mounted _____ Side mounted _____

Width [mm] _____ Projection a1 [mm] _____

Projection a [mm] _____ Height h1 [mm] _____

Height h2 [mm] _____ Height h3 [mm] _____

Thickness s [mm] _____ Radius r [mm] _____

Weight [kg] _____ Capacity [l] _____

Bucket filling degree [%] _____ Number of Buckets _____

Bucket spacing [mm] _____

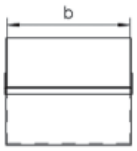

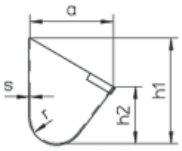

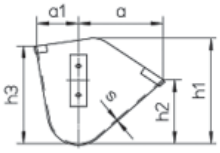

13. Drive sprockets _____ toothed ☐

No. of teeth _____ Pitch circle dia. [mm] _____

14. Chain diameter [mm] _____ Pitch [mm] _____

Quality grade _____ Number of links per chain end _____

15. Notes _____

pewag austria GmbH
A-8605 Kapfenberg, Mariazeller Straße 143, Phone: +43 (0) 3862 / 29 90-0, Fax: + 43 (0) 3862 / 29 90-700, saleinfo@pewag.com, **www.pewag.com**

KA/11/00014 9 002546 918475

pewag austria GmbH
A-8605 Kapfenberg, Mariazeller Straße 143, Phone: +43 (0) 3862 / 29 90-0, Fax: + 43 (0) 3862 / 29 90-700, saleinfo@pewag.com, **www.pewag.com**