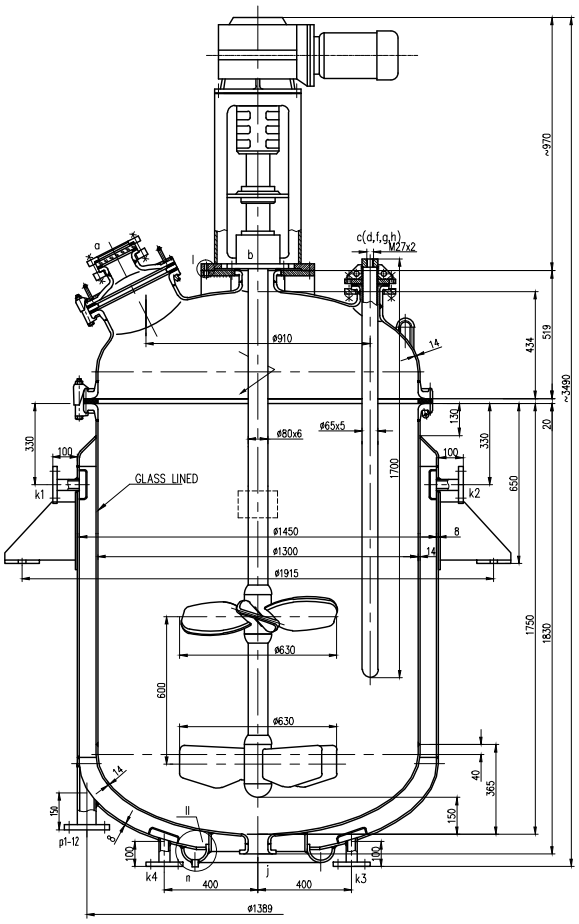

I GENERAL DATA

ITEM		SHELL		JACKET
DESIGN PRESSURE	MPa	0.1		ATM
MAWP	MPa	ATM		ATM
DESIGN TEMPERATURE	℃	200		200
OPERATION TEMPERATURE	℃	150		150
HYDRAULIC TEST PRESSURE	MPa	0.13		0.87
AIR SEAL TEST PRESSURE	MPa			
SAFE VALVE OPENING PRESSURE	MPa			
MATERIAL		THE FIRST GROUP		SALTY WATER OR STEAM
MATERIAL CHARACTERICS		NON-LETHAL		NON-TOXIC, NON-EXPLOSIVE
FULL/CALCULATION CAPACITY	m^3	2.64 /2.18	HEAT EXCHANGE AREA m^2	7.23
FILLING RATE		0.76	WEIGHT kg EMPTY	
VESSEL TYPE		II	FILLED IN WATER	

*1. HYDRAULIC TEST WILL BE DONE AFTER GLASSING LINE, HIGH VOLTAGE TEST SHOULD BE DONE ON THE GLASS LINED SURFACE AFTER HYDRAULIC TEST

*2. IONIZATION MEDIUM(CONCLUD FIONJIN WATER,EXCEPT ;HYDROFLYORIC ACID PHOSPHOR ACID(CONSISTENCE>30%

*3. TEMPERATURE:H80 CAND ALKALI(PH>12,TEMPERATURE>100)

*4. HIGH VOLTAGE TEST AFTER HYDRAULIC TEST

II MAIN MATERIAL

SHELL&HEAD	Q345R	PLATE STANDARD AS PER GB713-2008 AND GB25025-2010
JACKET&HEAD	Q345R	PLATE STANDARD AS PER GB713-2007

III DESIGN DATA

WALL THICKNESS mm	SHELL&HEAD	CORROSION ALLOWANCE 1.0		
	JACKET&HEAD	CORROSION ALLOWANCE 1.0		
WELDING EFFICIENCY	SHELL	0.85	SHELL HEAD	0.85
	JACKET	0.85	JACKET HEAD	0.85
AGITATOR	TYPE	COMBINATION		
	RPM r/min	63		
MOTOR	TYPE	YBX3-112M-4		
	POWER kW	4.0		
THERMOWELL POCKET TYPE		FLANGE TYPE		
DRIVE TYPE		KF77		

IV DESIGN,MANUFACTURE,TEST AND INSPECTION

CODES		TSG 21-2016《PRESSURE VESSEL SAFE TECHNICAL SUPERVISE RULES》
STANDARD		GB25025-2010 GLASS LINED EQUIPMENT TECHNICAL CONDITION, GB/T150.1~150.4-2011 PRESSURE VESSEL
WELDING RULES		NB/T47015-2011
WELDING RT	TYPE	X RAY TEST:100% FOR A, B TYPE WELDING CONNECTION WHOSE LENGTH IS MORE THEN 250MM.
	STANDARD	NB/T47015-2011
PENETRATION TEST		KEROSENE PENETRATION EXAMINATION SHALL BE PERFORMED FOR LAPWELDS BETWEEN THE UPPER AND LOWER RINGS AND THE BODY
SURFACE NDE		100% SURFACE NDE SHALL BE PERFORMED ON THE CONNECTION BETWEEN UPPER CLOSURE AND JACKET, MEET NB/T47013 REGULATIONS:I GRADE QUALIFIED
JOINT TYPE		THE WELDING JOINT TYPE SHALL BE SUBJECT TO THE STIPULATIONS IN HG/T20583-2011,THE HEIGHT OF ANGLE WELDING SEAM SHALL BE SUBJECT TO THAT OF THE THINNER PLATE AND THE WELDING FOR FLANGES SHALL BEIN ACCORDANCE WITH THEIR RELATIVE STANDARDS
GLASS LINED THICKNESS mm		0.8~ 2.0 (AS PER GB/T 7991-2003)
HIGH VOLTAGE TEST		20 KV , NO PINHOLE (AS PER GB/T7993-2003)
ALLOW TO MEND PINHOLE		0
RESISTANCE TO SHARP TEMPERATURE VARIATION		COLD SHOCK 110 ℃ ,HOT SHOCK 120 ℃ (AS PER HG 2432-2001 ATTACHMENT A)
RADIAL RUNOUT OF SEAL SECTION OF AGITATOR mm		SINGLE MECHANICAL SEAL 0.35 (AS PER HG/T2637-94RULES)
AGITATOR ROTATION		SINGLE (CLOCKWISE ON THE FLATFORM)
TEST RUN WITH WATER INSTEAD OF MATERIAL		NO BIG NOISE OR VERIATION
NOZZLE AND SUPPORT		ACCORDING TO PLANFORM
PAINGTING		THE OUTSIDE OF EQUIPMENT SHALL BE COATED WITH ANTI-RUST PAINT TWO TIMES AND COMPOUND PAINT ONE TIME
BRAND,EVIDENCE,PACKING& TRANSPORT		AS PER GB25025-2010

V WELDING LIST

MANUAL ARC WELD	WELDING ROD TRADEMARK: SHELL:E5015,JACKET:E5015
SUBMERGED WELD	WELDING WIRE TRADEMARK: H10Mn2 WELDING FLUX TRADEMARK: HJ431

VI NOZZLE LIST

SYMBOL	NOMINAL SPEC.	CONNECTING FLANGE STANDARD	SEAL FACE	SERVICE
a	400x300			MANHOLE WITH SIGHTGLASS
b	125			AGITATOR
c	100			THERMOWELL POCKET
d	100	PN1.0 DN100 HG/T2105	PLANE	SPARE
e	125			SIGHTGLASS
f	125	PN1.0 DN125 HG/T2105	PLANE	SPARE
g	100	PN1.0 DN100 HG/T2105	PLANE	SPARE
h	125	PN1.0 DN125 HG/T2105	PLANE	SPARE
j	100	PN1.0 DN100 HG/T2105	PLANE	MEDIUM OUTLET
k1-4	40	PN10 DN40 HG/T20592	EMBASS	IN/OUTLET
m	G3/8"		SCREW	VENT HOLE
n	G1/2"		SCREW	VENT HOLE
p1~12	65			ELECTRICAL HEATING NOZZLE

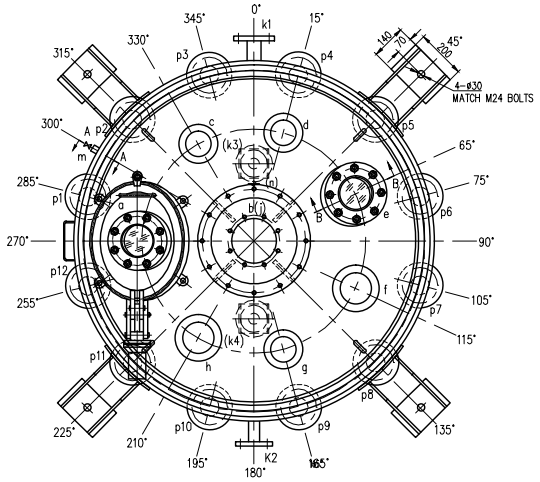

I
NO SCALE

II
NO SCALE

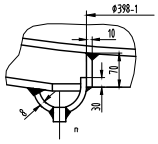

B-B
NO SCALE

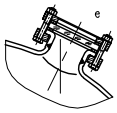

A-A
NO SCALE

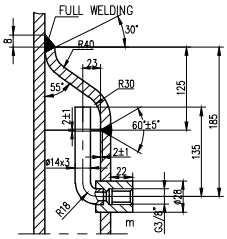

ZIBO TAIJI INDUSTRIAL ENAMEL CO., LTD.

DESIGN	WCX	K2000L GLASS LINED REACTOR	DESIGN ITEM
DRAW			DESIGN STAGE
CHECK BY			
ACCEPT BY			
PROCESS			
STANDARD			