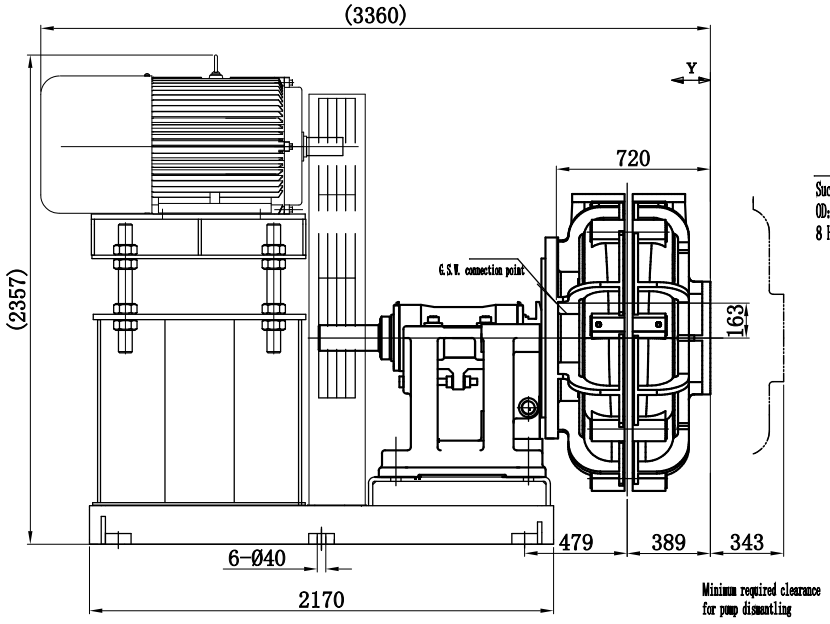

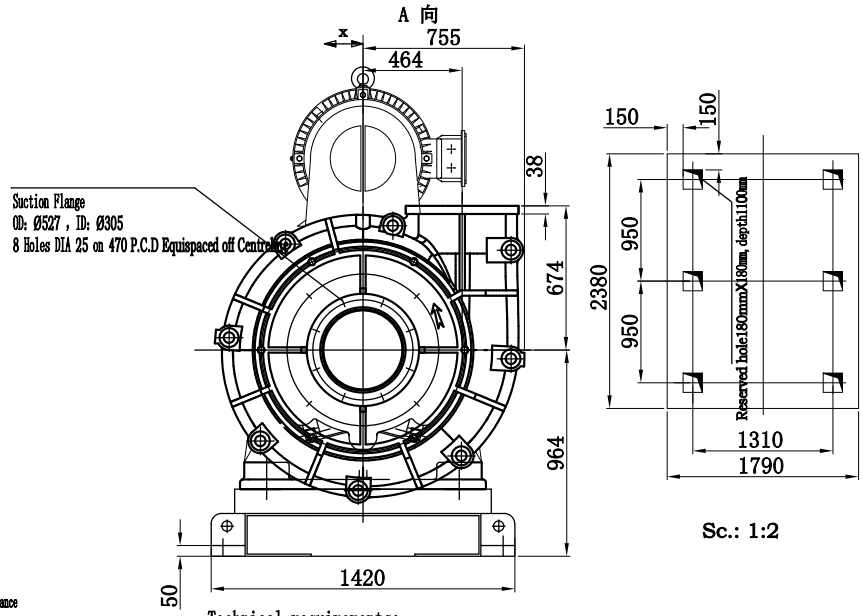

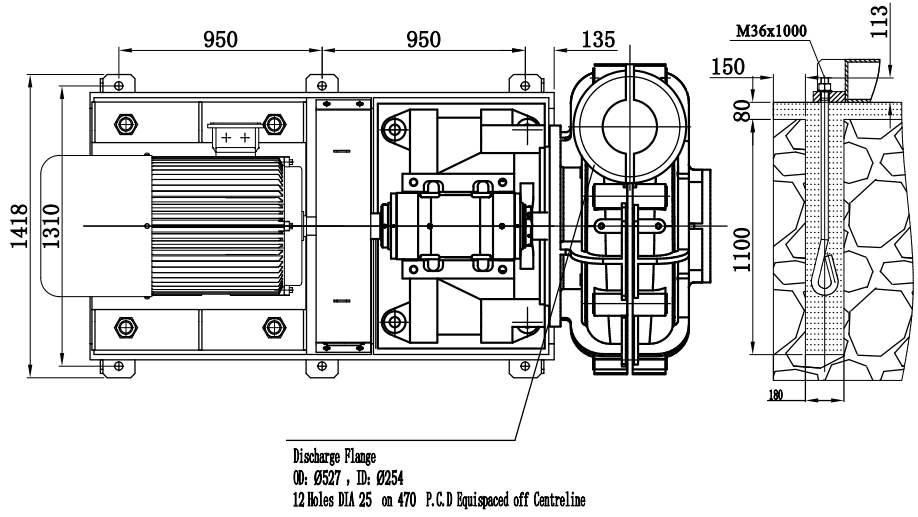

Technical requirements:

1. Manufacturing specification for general riveted weldment, length dimension tolerance shall be in accordance with class F (applicable to length tolerance), see the following table

Length dimension applicable to welding parts and welding components, such as external dimension, internal dimension, step dimension, width and center distance dimension, etc

Nominal size	>315 ≤1000	>1000 ≤2000	>2000 ≤4000	>4000 ≤8000	>8000 ≤12000
Tolerances for riveted Weldments	±3	±4	±6	±8	±10

Tech. Requirements

1. Suction and discharge pipes shall be independently supported, with no load applied on the pump;
2. Be aware of the rotation direction of the unit, which is counterclockwise, viewed from the suction end;check the correct rotation direction of the motor before V-belt is connected;
3. G.S.W. shall be clean water;
4. The lifting eyes on the base can only be used for lifting the base, and shall not be used for lifting the whole unit.

Impeller	Cr26
Pump casting material	Cr26
liner	Rubber
Part name	Material

Discharge positions available, viewed from suction end

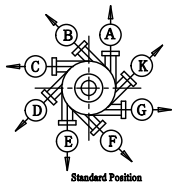

Standard Position

When froth slurry is pumped, Positions B & C are recommened

When pump chamber needs to be emptied, Positions F & G are used

Flange Load Allowed							
Suction Flange				Discharge Flange			
Fx	Fxy	Mxy	Mz	Fy	Fxz	Mxz	My
(KN)	(KN)	(KNm)	(KNm)	(KN)	(KN)	(KNm)	(KNm)
43.7	21.85	10.3	5.15	21.7	10.85	5.1	2.55

Load Data

Item	Wt (Kg)	Center of Gravity	
		X	Y
Pump	3630		
Motor	2000		
Base	1550		
Total Wt	7180		
Dynamic Load	175.91KN		

REFERENCE TITLE	REFERENCE No.

NOTES

LEGEND

KEY PLAN

01	2020.10.10	IFI	Ze Ziqeng	Ze Ziqeng	Lin Xiangyang	Ze Xuelun
00	2020.08.08	IFI	Ze Ziqeng	Ze Ziqeng	Lin Xiangyang	Ze Xuelun
NO	REV	DESCRIPTION	DRAWN	CHECK	APPROVE	APPROVE

Shargan

Project: NATIONAL IRANIAN COPPER INDUSTRIES COMPANY

SARCHESHMEH SLAG CONCENTRATE PLANT PROJECT

Document TITLE: slurry pump general drawing (37-1503-01/02)

DOCUMENT NUMBER	NO.	REV	REV DATE	SIZE	SHEET No.
6000 37RO-JP-P-MEM-012	01	00	2020.08.08	A1	1:150	1 OF 1